We reserve all rights in this document and in the information contained therein. Reproduction, use or disclosure to third parties without express authority is strictly forbidden. © Copyright ABB

The information in this document is subject to change without notice and should not be construed as a commitment by ABB. ABB assumes no responsibility for any errors that may appear in this document.

Except as may be expressly stated anywhere in this document, nothing herein shall be construed as any kind of guarantee or warranty by ABB for losses, damages to persons or property, fitness for a specific purpose or the like.

In no event shall ABB be liable for incidental or consequential damages arising from use of this document.

This document and parts thereof must not be reproduced or copied without ABB's written permission, and contents therof must not be imparted to a third party nor be used for any unauthorized purpose. Contravention will be prosecuted.

Additional copies of this document may be obtained from ABB at its then current charge.

© Copyright 2024 ABB ALL right reserved.

ABB

SE-721 68 Västerås
Sweden

We reserve all rights in this document and in the information contained therein. Reproduction, use or disclosure to third parties without express authority is strictly forbidden. © Copyright ABB

TABLE OF CONTENTS

PAGE	PAGE DESCRIPTION	Date	Edited by
1	COPYRIGHT page	2017-03-17	Thomas
2	TABLE OF CONTENTS	2021-05-04	sethsta
3	TABLE OF CONTENTS	2021-05-04	sethsta
4	TABLE OF CONTENTS	2020-09-11	SETHSTA
5	TABLE OF CONTENTS	2020-09-11	SETHSTA
7	Device list sorted by Location	2020-09-11	sethsta
10	REVISION INFOMATION	2021-05-04	sethsta
11	SYMBOL INFORMATION	2020-03-20	sethsta
12	VIEW OF CONTROL MODULE	2020-03-20	sethsta
12.1	INTERFACE BOARD, ANYBUS	2018-10-15	SETHSTA
13	VIEW OF CONTACTOR & AXIS COMPUTER UNIT	2020-03-20	sethsta
14	BLOCK DIAGRAM CONTROL UNIT	2020-03-20	sethsta
15	PROCESS POWER SUPPLY	2023-10-18	SEANHAG7
16	OPTION : POWER SUPPLY DEVICENET	2020-03-20	sethsta
16.5	RUN CHAIN block diagram in PANEL BOARD A21 and CONTROL PANEL S21	2020-03-20	sethsta
17	RUN CHAIN and PANEL BOARD A21 Sh. 1 of 3	2023-10-18	SEANHAG7
18	RUN CHAIN and PANEL BOARD A21 Sh. 2 of 3	2023-10-18	SEANHAG7
19	RUN CHAIN and PANEL BOARD A21 Sh. 3 of 3	2023-10-18	SEANHAG7
20	RUN CHAIN A21 EXTERNAL CONTROLL PANEL/BOX , 2 & 3 MODE SELECTOR, EM.STOP	2020-09-11	SETHSTA
20.1	EXTERNAL CONTROLL PANEL/BOX RUN CHAIN EXT.S21, 2 & 3 MODE SELECTOR	2023-10-18	SEANHAG7
21	RUN CHAIN EXT A21 OPERATING WITH OPT: HOT PLUG rel 11.1	2024-03-14	SEANHAG7
22	FPU, FLEXPENDANT and option HOT PLUG	2020-09-11	SETHSTA
22.1	FPU, FLEXPENDANT and Opt. HOLD TO RUN DEVICE T10 JOGGING DEVICE	2020-09-10	SETHSTA
22.2	FPU, Extended FLEXPENDANT cable 15 - 30 m	2020-09-10	SETHSTA
23	MAIN COMPUTER DSQC1000/1018/1024	2024-03-14	SEANHAG7
24	MAIN COMPUTER DSQC1000/1018/1024	2024-03-14	SEANHAG7
24.3	SAFETY BOARD A31.4 HARDWARE SWITCH	2023-10-18	SEANHAG7
24.4	SAFETY BOARD A31.4 SOFTWARE SWITCH	2020-03-20	sethsta
24.5	SAFETY BOARD A31.4 DSQC1015 Hardware and Software based Mode Switch	2023-10-18	SEANHAG7
25	FIELDBUS ADAPTER: ETHERNET/IP, PROFIBUS and PROFINET IO	2020-03-20	sethsta
26	PROFIBUS DP M	2020-03-20	sethsta
27	DEVICENET ADAPTER	2020-03-20	sethsta
28	DIGITAL PART OF COMBI I/O AND DIGITAL I/O UNIT	2020-03-20	sethsta

TABLE OF CONTENTS

PAGE	PAGE DESCRIPTION	Date	Edited by
29	DIGITAL I/O UNIT	2020-03-20	sethsta
30	COMBI I/O UNIT	2020-03-20	sethsta
31	ANALOGUE I/O UNIT	2020-03-20	sethsta
32	RELAY I/O UNIT	2020-03-20	sethsta
33	RELAY I/O UNIT	2020-03-20	sethsta
34	REMOTE I/O UNIT	2020-03-20	sethsta
34.2	Local I/O Digital Base 16in/16out	2020-03-20	sethsta
34.4	Local I/O Digital add on 16in/16out	2020-03-20	sethsta
34.6	Local I/O Analog add on 4in/4out	2020-03-20	sethsta
34.8	Local I/O Relay add on 8RO/8DI	2020-03-20	sethsta
35	INTERBUS SLAVE	2020-03-20	sethsta
36	PROFIBUS DP SLAVE	2020-03-20	sethsta
37	ETHERNET SWITCH	2020-03-20	sethsta
37.1	ETHERNET SWITCH A34, option MULTI MOVE 604-1/2	2023-10-18	SEANHAG7
37.2	ETHERNET SWITCH A64/CAMERA	2021-05-03	SETHSTA
37.3	VISION, INTEGRATED CAMERAS	2020-03-20	sethsta
38	ENCODER UNIT	2020-03-20	sethsta
38.5	CONVEYOR TRACKING MODULE, DSQC 2000	2020-03-20	sethsta
39	CC-LINK	2020-03-20	sethsta
40	REMOTE SERVICE BOX for Rel. 16.1 and earlier	2020-03-20	sethsta
40.1	REMOTE SERVICE BOX DSQC1016/DSQC1023 from Rel. 16.2	2020-03-20	sethsta
41	BLOCK DIAGRAM DRIVE UNIT	2020-03-20	sethsta
42	VIEW OF DRIVE MODULE LV	2020-03-20	sethsta
43	VIEW OF DRIVE MODULE HV	2020-03-20	sethsta
44	TRANSFORMER UNIT 262V	2020-03-20	sethsta
45	TRANSFORMER UNIT 480V	2020-03-20	sethsta
46	POWER SUPPLY	2020-03-20	sethsta
47	CONTACTOR BOARD	2021-05-03	SETHSTA
48	CONTACTOR UNIT	2023-10-18	SEANHAG7
49	AXIS COMPUTER and MAIN SERVO DRIVE UNITS	2020-03-20	sethsta
50	CONTACTOR UNIT	2020-03-20	sethsta
51	AXIS COMPUTER BOARD	2020-03-20	sethsta
52	FORCE MEASUREMENT BOX	2020-03-20	sethsta

We reserve all rights in this document and in the information contained therein. Reproduction, use or disclosure to third parties without express authority is strictly forbidden. © Copyright ABB

TABLE OF CONTENTS

PAGE	PAGE DESCRIPTION	Date	Edited by
53	EPS	2020-03-20	sethsta
54	SAFE MOVE	2020-03-20	sethsta
55	SAFE MOVE	2020-03-20	sethsta
56	MAIN DRIVE UNIT	2020-03-20	sethsta
57	OPTION : FAN UNIT	2020-03-20	sethsta
57.1	SERVO DRIVE SYSTEM IRB 120	2020-09-10	SETHSTA
57.2	CONTROL CABLE IRB 120	2020-03-20	sethsta
57.3	CUSTOMER SIGNALS IRB 120	2020-03-20	sethsta
58	SERVO DRIVE SYSTEM IRB 140	2020-03-20	sethsta
59	CONTROL CABLE IRB 140	2020-03-20	sethsta
60	CUSTOMER SIGNAL IRB 140	2020-03-20	sethsta
61	SERVO DRIVE UNIT IRB 260	2020-03-20	sethsta
62	CONTROL CABLE IRB 260	2020-03-20	sethsta
63	CUSTOMER POWER/SIGNAL IRB 260	2020-03-20	sethsta
64	SERVO DRIVE UNITS IRB 360	2020-03-20	sethsta
65	CONTROL CABLE IRB 360	2023-10-18	SEANHAG7
66	CUSTOMER SIGNAL IRB 360	2020-03-20	sethsta
66.1	CUSTOMER POWER/SIGNAL SINGLE CABINET IRB 360	2020-03-20	sethsta
67	SERVO DRIVE SYSTEM IRB 460	2020-03-20	sethsta
68	CONTROL CABLE IRB 460	2023-10-18	SEANHAG7
69	SERVO DRIVE SYSTEM IRB 660, 760	2020-03-20	sethsta
70	CONTROL CABLE IRB 660, 760	2020-03-20	sethsta
71	CUSTOMER POWER/SIGNAL IRB460, 660, 760	2020-03-20	sethsta
72	CAN, PROf-bus,CP/CS,Profinet IRB460, 660, 760	2020-09-10	SETHSTA
72.1	SERVO DRIVE SYSTEM IRB 1200	2020-03-20	sethsta
72.2	CONTROL CABLE IRB 1200	2023-10-18	SEANHAG7
72.3	CUSTOMER SIGNAL SINGLE CABINET IRB 1200	2020-03-20	sethsta
73	SERVO DRIVE UNIT IRB 1600/1660	2020-03-20	sethsta
74	CONTROL CABLE IRB 1600/1660	2020-03-20	sethsta
75	CUSTOMER POWER/SIGNAL IRB 1600/1660	2020-03-20	sethsta
76	SERVO DRIVE UNIT IRB 2400	2020-03-20	sethsta
77	CONTROL CABLE IRB 2400	2020-03-20	sethsta
78	CUSTOMER POWER/SIGNAL IRB 2400	2020-03-20	sethsta

We reserve all rights in this document and in the information contained therein. Reproduction, use or disclosure to third parties without express authority is strictly forbidden. © Copyright ABB

We reserve all rights in this document and in the information contained therein. Reproduction, use or disclosure to third parties without express authority is strictly forbidden. © Copyright ABB

TABLE OF CONTENTS

PAGE	PAGE DESCRIPTION	Date	Edited by
79	SERVO DRIVE SYSTEM IRB 2600	2020-03-20	sethsta
80	CONTROL CABLE IRB 2600	2023-10-18	SEANHAG7
81	CUSTOMER POWER/SIGNAL IRB2600	2020-03-20	sethsta
82	CUSTOMER POWER/SIGNAL DEVICE NET IRB2600	2020-03-20	sethsta
83	CUSTOMER POWER/SIGNAL PROFI BUS IRB 2600	2020-03-20	sethsta
83.3	DevNet/PofiNet/Ethernet/Profibus addition to CP/CS IRB2600	2020-03-20	sethsta
83.4	SERVO DRIVE SYSTEM IRB 4400	2020-03-20	sethsta
83.5	CONTROL CABLE IRB 4400	2023-10-18	SEANHAG7
83.6	CUSTOMER POWER/SIGNAL SINGLE CABINET IRB 4400	2020-03-20	sethsta
85	SERVO DRIVE SYSTEM IRB 4600	2020-03-20	sethsta
86	CONTROL CABLE IRB 4600	2023-10-18	SEANHAG7
87	CUSTOMER POWER/SIGNAL IRB4600	2020-03-20	sethsta
88	CUSTOMER POWER/SIGNAL DEVICE NET IRB4600	2020-03-20	sethsta
89	CUSTOMER POWER/SIGNAL PROFI BUS IRB 4600	2020-03-20	sethsta
90	DevNet/PofiNet/Ethernet/Profibus additional to CP/CS //IRB4600	2020-03-20	sethsta
91	SERVO DRIVE SYSTEM IRB 6700	2020-03-20	sethsta
92	CONTROL CABLE IRB 6700	2023-10-18	SEANHAG7
93	CUSTOMER POWER/SIGNAL, PARACOM PARAMULTI , PARABUSCOM IRB 6700	2020-03-20	sethsta
94	DevNet//EtherNet//ProfiNet//PBUS ADDITION TO CP/CS IRB 6700	2020-09-09	SETHSTA
95	SERVO DRIVE SYSTEM IRB 66xx - 76xx	2020-03-20	sethsta
96	CONTROL CABLE IRB 66xx - 76xx	2020-03-20	sethsta
97	COOLING AXES 1/2 IRB 6600 - 7600	2020-03-20	sethsta
98	CUSTOMER POWER/SIGNAL IRB 6600 - 7600	2020-03-20	sethsta
99	DevNet//IBUS//PBUS ADDITION TO CP/CS IRB 6600 - 7600	2020-03-20	sethsta
100	CUSTOMER POWER/SIGNAL PROFI BUS IRB 6600 - 7600	2020-03-20	sethsta
101	CUSTOMER POWER/SIGNAL DEVICE NET IRB 6600 - 7600	2020-03-20	sethsta

Location name	Function name	Page	Location name	Function name	Page
-EXT-S21-S22	Option HOT PLUG	21	-G3	ENERGY BANK	15
-EXT-S21-S22-H1	SIGNAL LAMP	21	-G6	OPTION : DEVICENET POWER SUPPLY	16
-A21	PANEL BOARD	17	-I/O.X	ANALOGUE I/O UNIT	31
-A31	MAIN COMPUTER	23	-I/Ox	DIG. PART OF COMBI I/O AND DIG. I/O UNIT	28
-A31.2	DeviceNet M/S DSQC1006	27	-K42	MOTORS ON CONTACTOR 1	48
-A31.3	PROFIBUS M	26	-K43	MOTORS ON CONTACTOR 2	48
-A31.4	Safety Board DSQC1015	24.5	-K44	BRAKE CONTACTOR	48
-A32	OPTION: Expansion board SERIE DSQC1003	24	-M140-A41.1	MAIN SERVO DRIVE UNIT	58
-A32.1	ETHERNET/IP Fieldbus adapter DSQC 669 Slave	25	-Q1	Option Main Switch	45
-A32.2	PROFIBUS Fieldbus adapter DSQC 667 Slave	25	-R1.1-1	BLEEDER for LV	56
-A32.3	PROFINET IO Fieldbus adapter DSQC 688 Slave	25	-R1.1-2	BLEEDER for LV	56
-A32.4	DEVICENET IO Fieldbus adapter DSQC 1004 Slave	25	-R1.1-3	BLEEDER for HV	56
-A34	opt. MULTI MOVE 604-1/2 ETHERNET SWITCH	37.1	-S22	Option with HOT PLUG	22
-A41.1	MAIN DRIVE UNIT	56	-S22-H1	SIGNAL LAMP	22
-A41.1-2	MAIN SERVO DRIVE UNIT	49	-T1.1	TRANSFORMER UNIT	45
-A41.1-6	MAIN SERVO DRIVE UNIT	76	-T1.2	TRANSFORMER UNIT	44
-A42	AXIS COMPUTER BOARD	49	-T1.3	TRANSFORMER UNIT	45
-A44	SAFE MOVE	51	-Z1	Filter three phase	45
-A61	Option: REMOTE SERVICE BOX	40	-Z2	REAKTOR UNIT	45
-A64	Ethernet switch	37.2			
-A65	Ethernet switch	37			
-A67- CTM,	Coveyor Tracking DSQC2000	38.5			
-C1	CAPACITOR	70			
-E1	OPTION : FAN UNIT	57			
-EXT-A21-S21.2-H1	MOTOR ON (LAMP)	20			
-EXT-ETH_FPU	FLEXPENDANT	22.1			
-EXT-ETH_FPU-USB	FLEXPENDANT	22.1			
-EXT-S21	EXTERNAL CONTROL PANEL/BOX Sh.2	20.1			
-EXT-S21.1	3-MODE SELECTOR	20			
-EXT-S21.2	MOTOR ON PB	20			
-EXT-S21.3	EMERGENCY PB	20			
-EXT-T10	T10 JOGGING DEVICE	22.1			
-EXT-T10.1	HOLD TO RUN DEVICE	22.1			
-EXT-T10-ETH_FPU	FLEXPENDANT	22.1			
-F1	OPTION : AUTOMATIC FUSE	48			
-F2-HV	OPTION : AUTOMATIC FUSE	46			
-F2-LV	OPTION : AUTOMATIC FUSE	46			
-FMB	Option: 738-1	52			
-FMB-A1	DSQC686 VOLTAGE MEASURE BOARD	52			
-G1	DRIVE POWER SUPPLY	46			
-G2	PROCESS POWER SUPPLY	15			

We reserve all rights in this document and in the information contained therein.Reproduction, use or disclosure to third parties without express authority is strictly forbidden. © Copyright 2017 ABB

We reserve all rights in this document and in the information contained therein. Reproduction, use or disclosure to third parties without express authority is strictly forbidden. © Copyright ABB

Revison 10 2019 03 Rel 19.A

Information: New release indentification 19.A, 19.B, 19.C, 19.D the releases is presented four times every year, instead of two times before.
Sh.10 Revision sheet updated for 19.a

34.2 wire number 787 , 785 , 786 added,
column 7//0V_INT1, +24V_INT1 0V_INT2, +24V_INT2
34.4 0V_INT, +24V_INT
34.6 0V_INT, +24V_INT
34.8 0V_INT, +24V_INT
42 X6 and x7 shifted location

Revison 11 2020 03 Rel 19.B--20.A

Sh. All The DRAFT text was removed from all sheets in column 5 in the frame.
Sh.10 Revision sheet updated for 19.B
Sh.12 Main computer DSQC1024 add.
Sh.20, 20.1, 21, 22, 22.1, 22.2, was updated Soft ware/Hard ware switch.
Sh.23 Main computer DSQC1024 add.
Sh.24 Main computer DSQC1024 add.
Sh.57.4, 57.5, 57.6 new sheet added.

Revison 12 2020 09 Rel 20.B

Structure update from IRC5 to PMC
Sh.7 Device list updated.
Sh.10 Revision sheet updated for 20.B
Sh.72 Profinet added to 460,660,760

Revison 13 2021 05 Rel 21.C

Sh.1 Copyright updated 2021
Sh.2 Table of contents updated
Sh.3 Table of contents updated
Sh.10 Revision sheet updated for 21.C
Sh.18 X5:3, :5, :9, :11 Jumper text add. Not connected. Ref to manual. Column 1.
Sh.19 Enable_1 and Enable_2 column 7 changed direction.

Revison 14 2023 10 Rel 23D

Sh. 17/18/19/20.1/24.5/48 Implementation of SafeMove.
Sh. 24.3 Misspelling of contact -S21 was -XP37
Sh. 15/37.1 Misspelling of contact -XP1 was -XP39
Sh. 68/80/86/92 Jumper added to PTC-circuit.
Sh. 71 Misspelling of contact -R1.CP/CS was -R1.SMB

Revision 15 2024 03 Release 24.B

Sh. 21, Update Hot-Plugg connection XP/XS100
Sh. 23, 24 Customer Ethernet connection revised

We reserve all rights in this document and in the information contained therein. Reproduction, use or disclosure to third parties without express authority is strictly forbidden. © Copyright ABB

Stomme, ramverk/
Functional equipotential bonding

Stomme, ramverk/
Functional equipotential bonding

Jord, allmän symbol/
Earth , general symbol.

Störningsfri jord/
Functional earthing.

Skyddsjord/
Protective earthing.

Tvinnade ledare/
Twisted conductors.

Trippel tvinnade ledare/
Triple twisted conductors.

Fyrdubbelt tvinnade ledare/
Quadruple twisted conductors.

Part A
Part B

Tvinnade ledare part A med part B
Twisted conductors part A with part B

Skärm/
Shield.

Slutkontakt/
Make contact, general.

Handmanövrerad brytare, allmän/
Switch manually operated, general.

Styrning med spak/
Actuator (operated by lever).

Styrning genom vridning/
Actuator(operated by turning).

Styrning genom tryckning/
Actuator(operated by pushing).

Nödstopp (svamptryckknapp)/
Actuator, emergency.

Styrning, elektromagnetisk styrdon/
Actuator, by electromagnetic.

PAST DESIGN
Old component design.
Old circuit design.
Old phased out option.

Filter/
Filter.

Lampa/
Lamp.

Kontakthylsa hona/
Socket outlet female.

Kontaktstift hane/
Pin male.

Strömtransformator/
Current transformer.

Likström, DC /
Direct current, DC.

Växelström, AC /
Alternating current, AC.

Varistor/
Varistor

U

Column coordinate number on the drawing

Wire/connector one colour code.
BK = Black, BN = Brown, RD = Red, OG = Orange
YE = Yellow, GN = Green, BU = Blue, VT = Violet
GY = Grey, WH = White, PK = Pink, TQ = Turquoise

Wire/connector two colour code.

Example 1 : WH/RD = White and Red.
Example 2 : GNYE = Green and Yellow.

Example: Cable with four colour coded wire,
square area AWG24 and cable number 709.

709 AWG24	BK
	BN
	RD/OG
	BK/OG

Translation table square area from AWG to mm2.

AWG28	0,093	AWG18	0,93
AWG26	0,15	AWG16	1,25
AWG24	0,25	AWG14	2,44
AWG22	0,34	AWG12	3,02
AWG20	0,56	AWG10	4,65

Run chain presentation starts at sheet 13.
The Run chain marked as a wider wire.

Example: Run chain marked with a wider wire.

Example: Not Run chain marked with a thin wire.

Example, showing how to read the information before and after a signal.

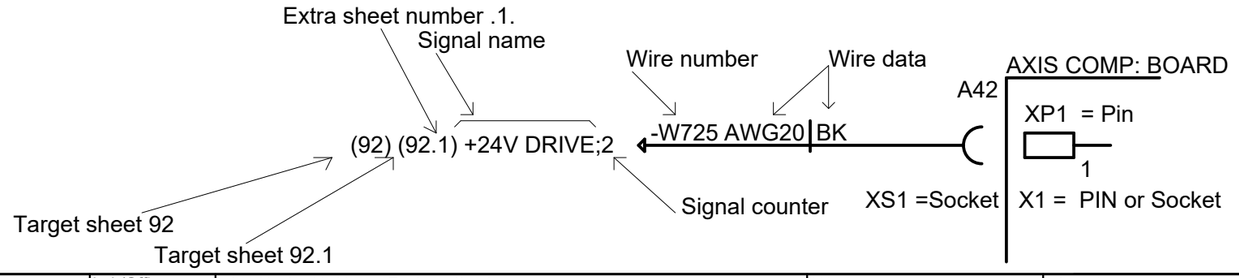

Latest revision:		ABB	Lab/Office: RA/RDP	PMC DESIGN 15 Rel: 24B SYMBOL INFORMATION	Status: Approved	Plant: = Location: + Sublocation: +
Prepared by, date: A Hägglund	Approved by, date: S Hällgren 2024-03-15				Document no. 3HAC026871-020	Rev. Ind 15	Page 11 Next 12 Total 125

We reserve all rights in this document and in the information contained therein. Reproduction, use or disclosure to third parties without express authority is strictly forbidden. © Copyright ABB

Main Computer Unit DSQC1000 Rel. 15.2 and earlier
Main Computer Unit DSQC1018 Rel. 16.1
Main Computer Unit DSQC1024 Rel. 20.A

PMC open door

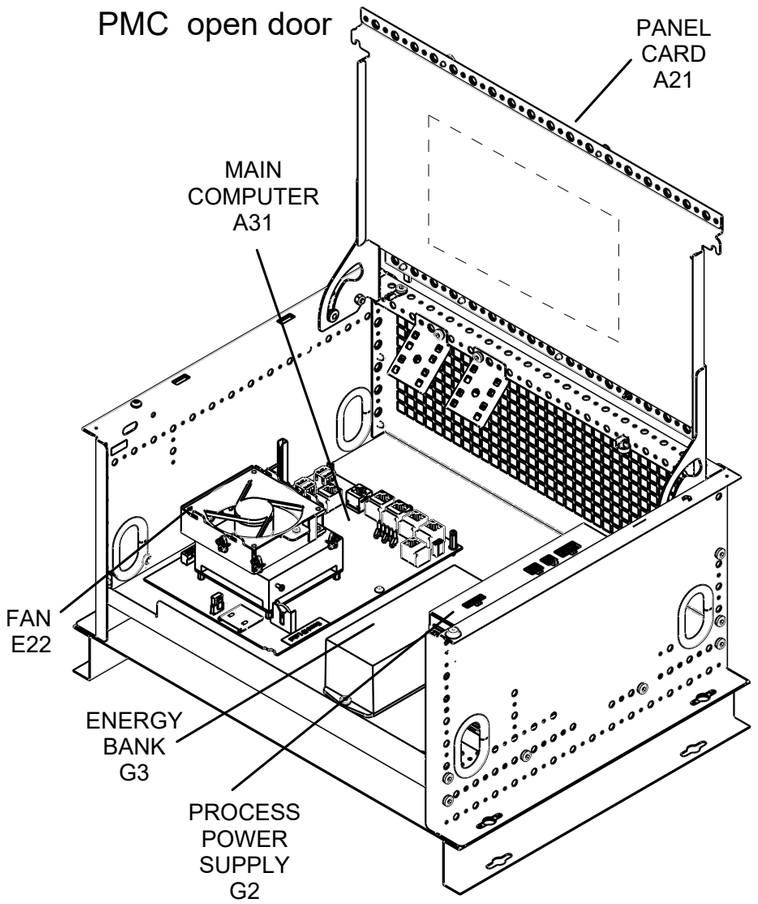

PMC top view

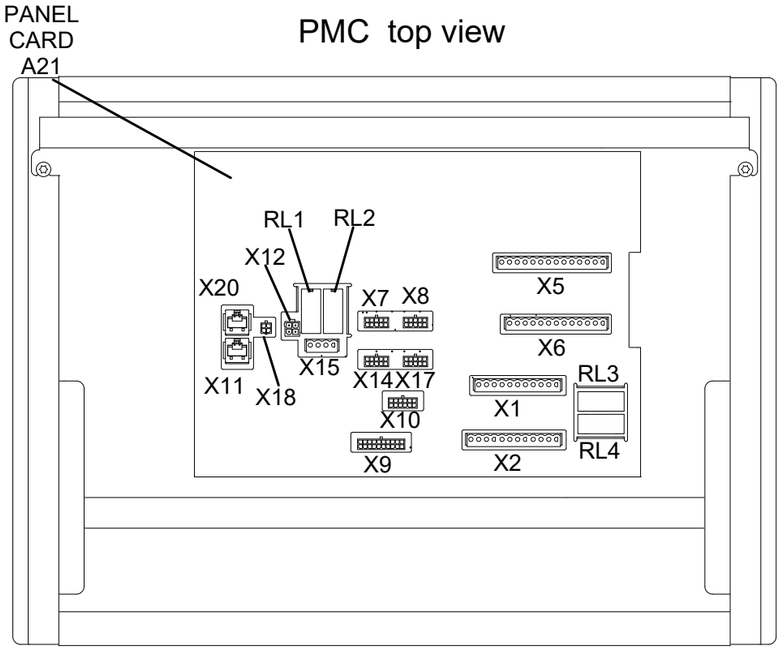

PMC bottom view

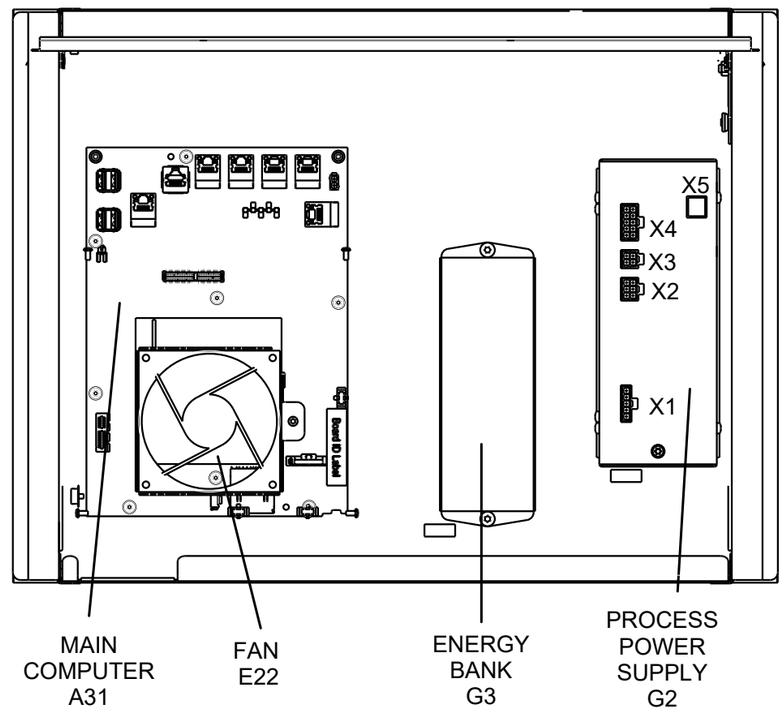

Latest revision:		ABB	Lab/Office: RA/RDP	PMC DESIGN 15 Rel: 24B VIEW OF CONTROL MODULE	Status: Approved	Plant: = Location: + Sublocation: +
Prepared by, date: A Hägglund	Approved by, date: S Hällgren 2024-03-15				Document no. 3HAC026871-020	Rev. Ind 15
						Page 12 Next 12.1 Total 125

We reserve all rights in this document and in the information contained therein. Reproduction, use or disclosure to third parties without express authority is strictly forbidden. © Copyright ABB

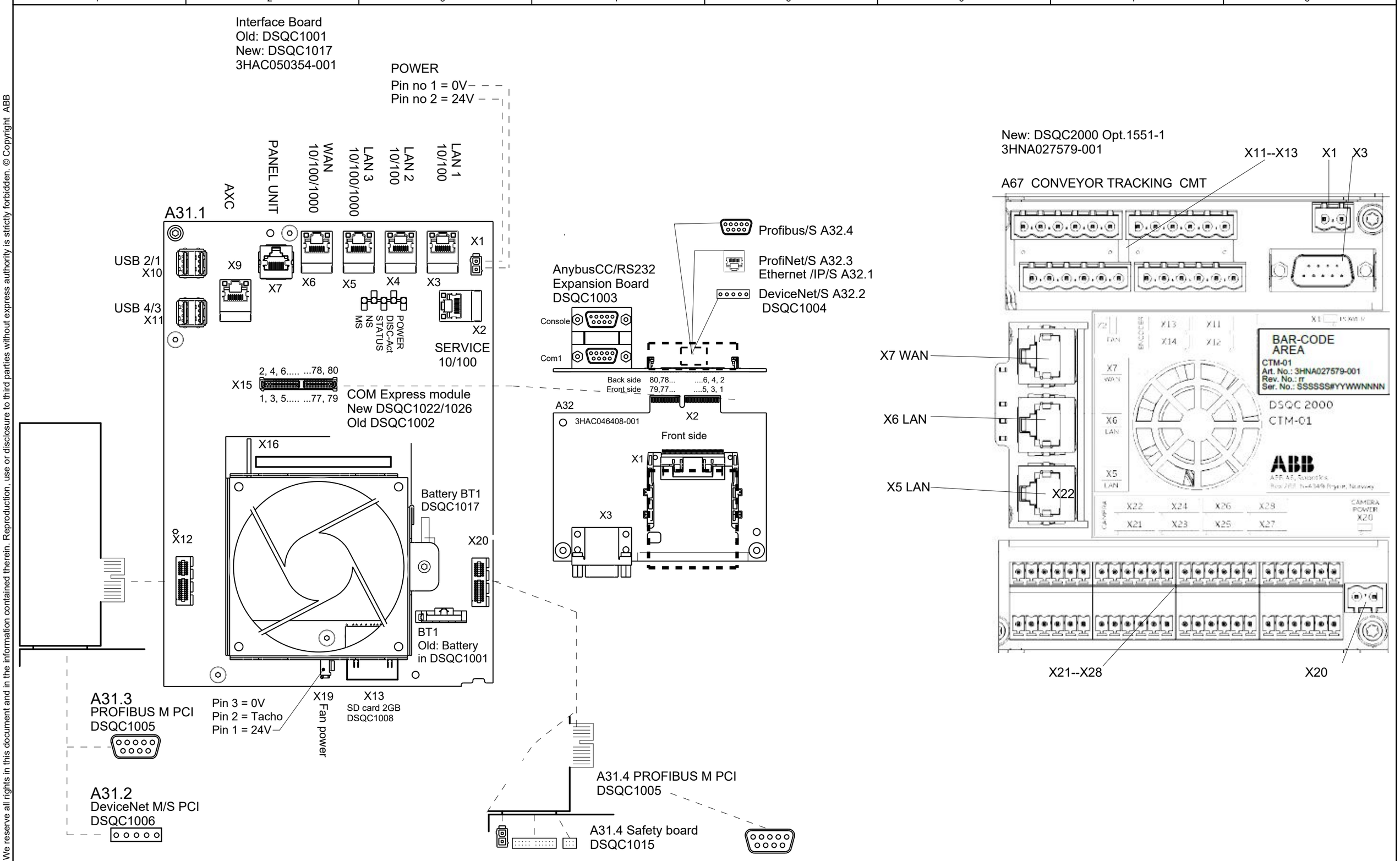

Latest revision:		ABB Lab/Office: RA/RDP	PMC DESIGN 15 Rel: 24B INTERFACE BOARD, ANYBUS	Status: Approved	Plant: = Location: + Sublocation: +
Prepared by, date: A Hägglund	Approved by, date: S Hällgren 2024-03-15			Document no. 3HAC026871-020	Rev. Ind 15

Page 12.1
Next 13
Total 125

We reserve all rights in this document and in the information contained therein. Reproduction, use or disclosure to third parties without express authority is strictly forbidden. © Copyright ABB

A42 Axis computer unit

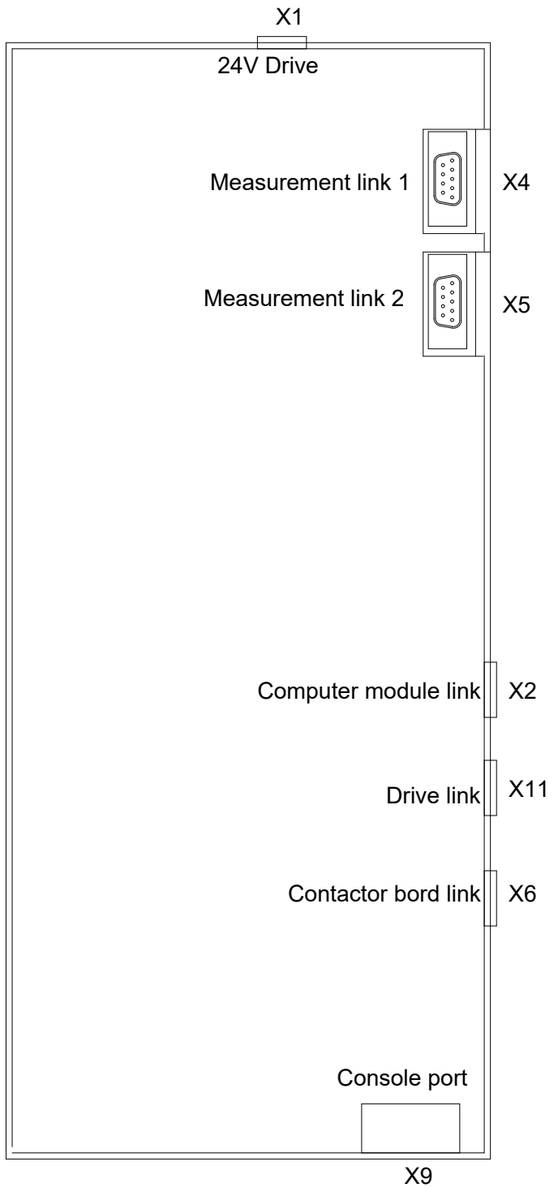

A43 Contactor unit

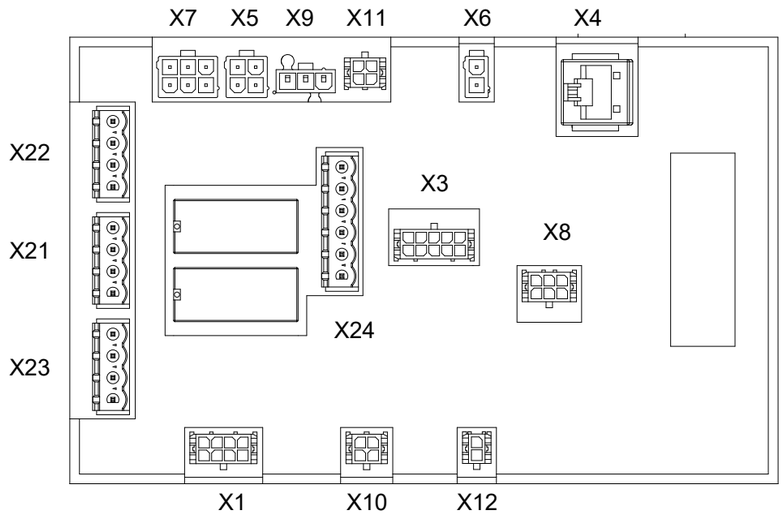

A44 Safe move

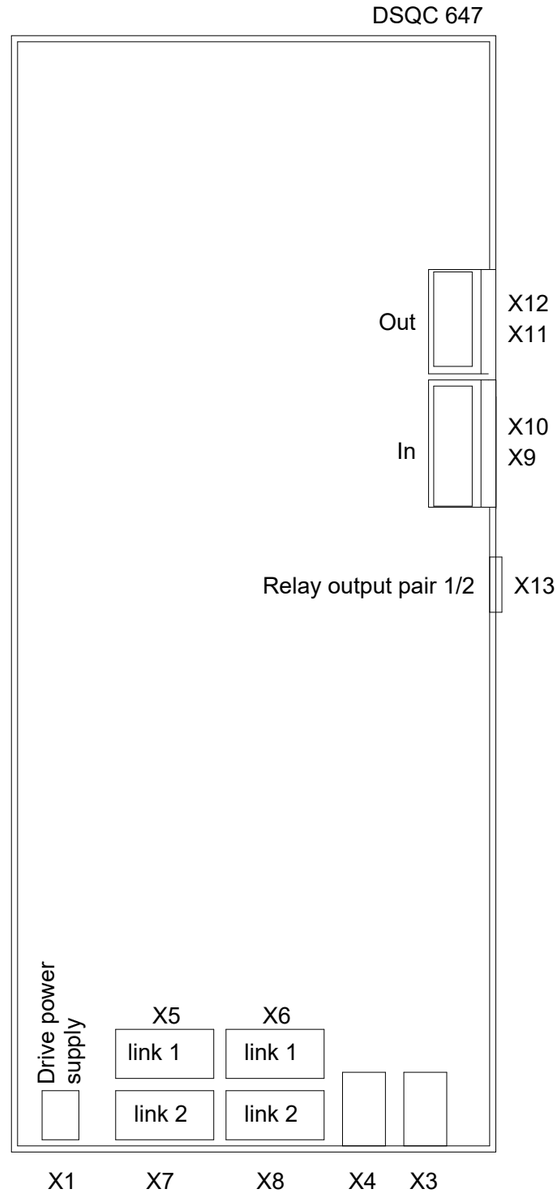

A44 EPS unit

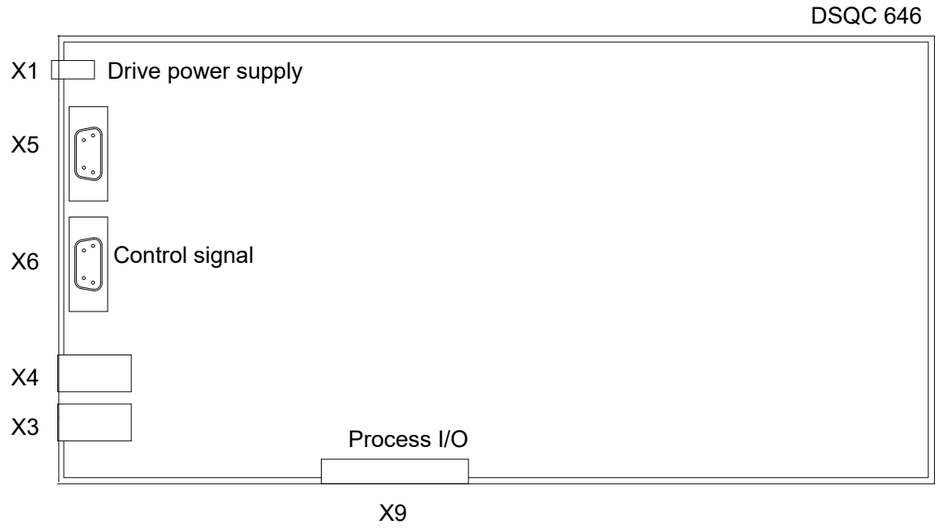

Latest revision:		Lab/Office: RA/RDP	PMC DESIGN 15 Rel: 24B VIEW OF CONTACTOR & AXIS COMPUTER UNIT	Status: Approved	Plant: = Location: + Sublocation: +
Prepared by, date: A Hägglund	Approved by, date: S Hällgren 2024-03-15			Document no. 3HAC026871-020	Rev. Ind 15
					Page 13 Next 14 Total 125

We reserve all rights in this document and in the information contained therein. Reproduction, use or disclosure to third parties without express authority is strictly forbidden. © Copyright ABB

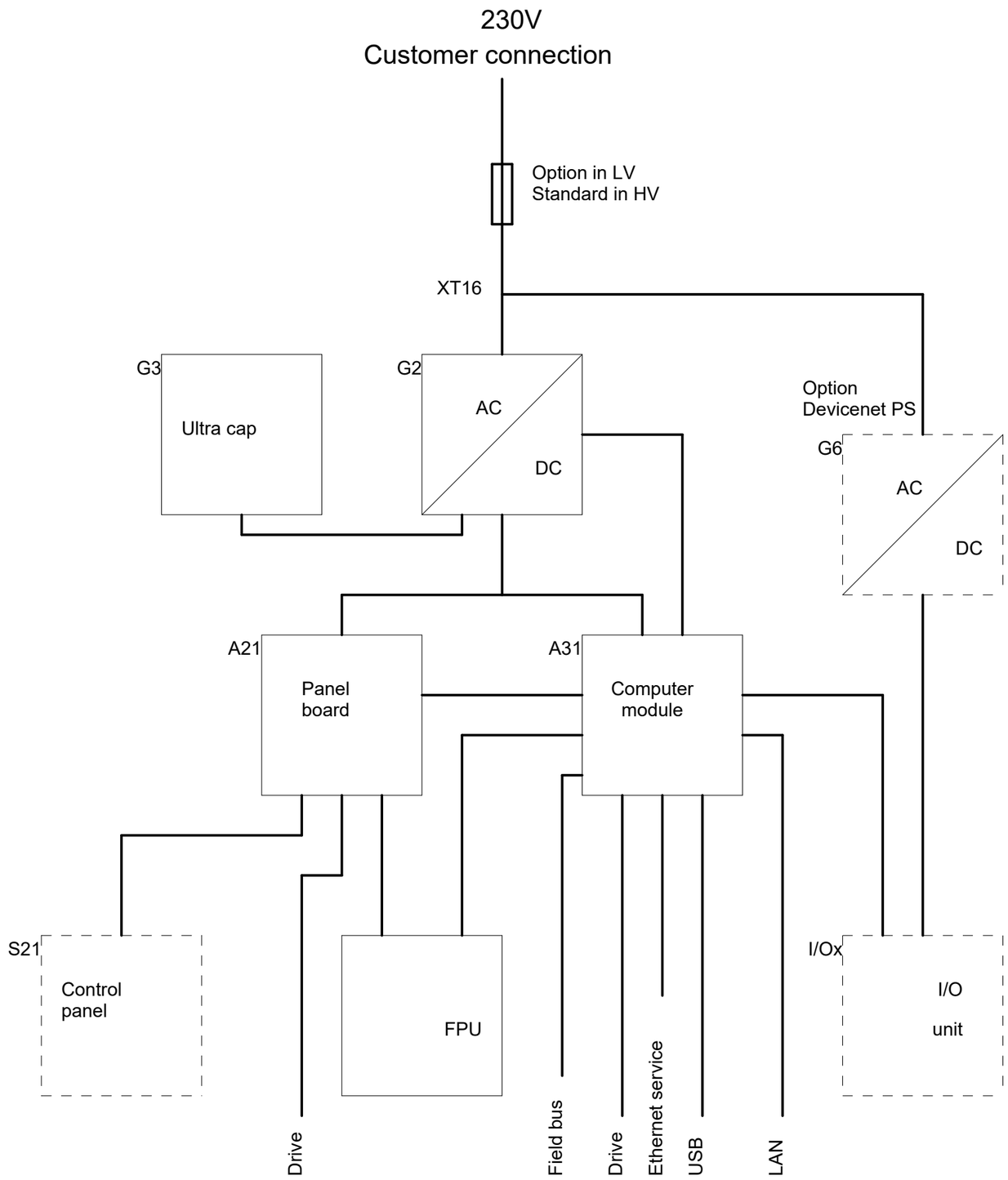

Latest revision:		ABB	Lab/Office: RA/RDP	PMC DESIGN 15 Rel: 24B BLOCK DIAGRAM CONTROL UNIT	Status: Approved	Plant: = Location: + Sublocation: +
Prepared by, date: A Hägglund	Approved by, date: S Hällgren 2024-03-15				Document no. 3HAC026871-020	Rev. Ind 15

We reserve all rights in this document and in the information contained therein. Reproduction, use or disclosure to third parties without express authority is strictly forbidden. © Copyright ABB

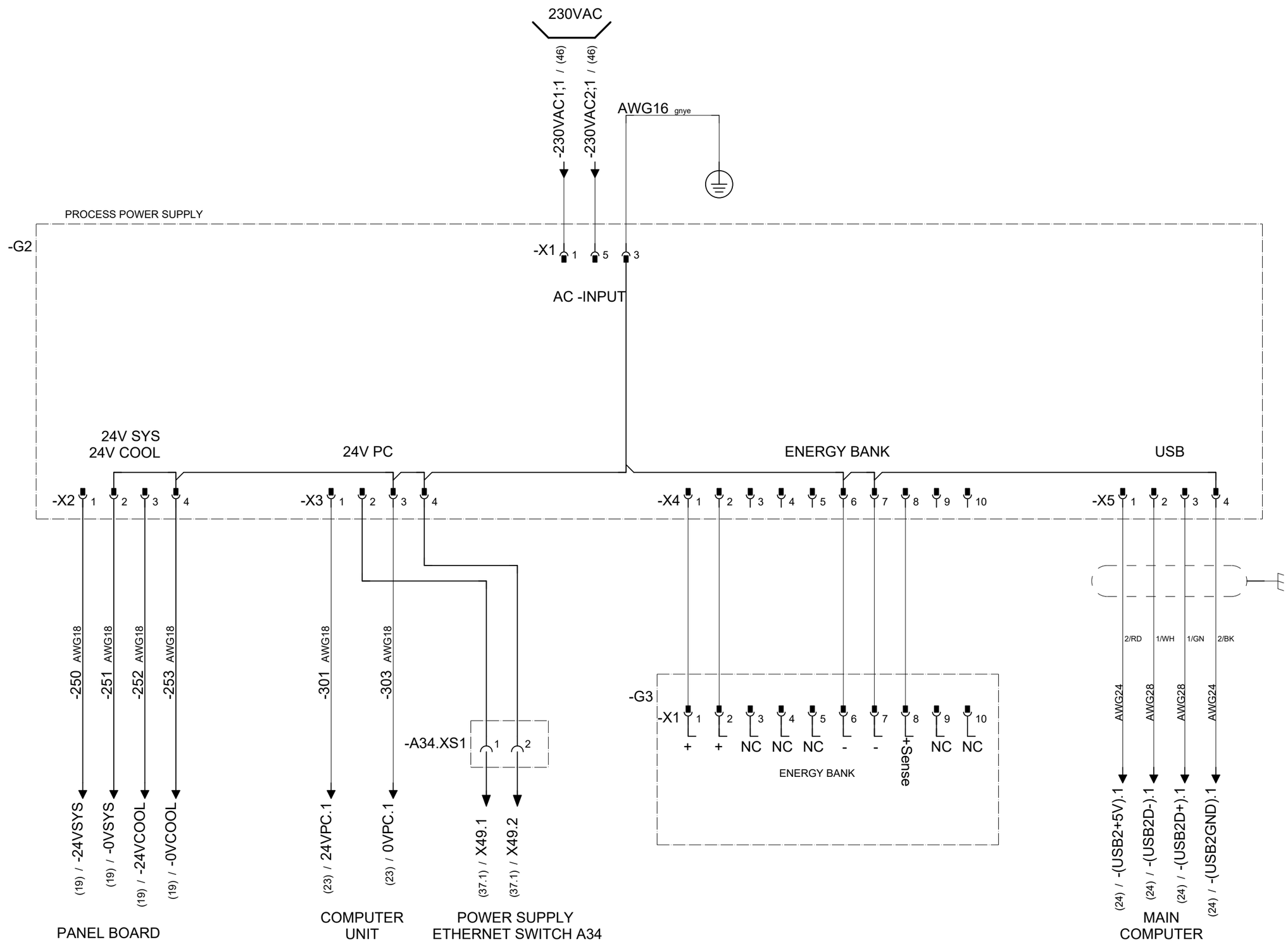

Latest revision:		Lab/Office: RA/RDP	PMC DESIGN 15 Rel: 24B PROCESS POWER SUPPLY	Status: Approved	Plant: = Location: + Sublocation: +
				Document no. 3HAC026871-020	Rev. Ind 15
Prepared by, date: A Hägglund	Approved by, date: S Hällgren 2024-03-15				Page 15 Next 16 Total 125

We reserve all rights in this document and in the information contained therein. Reproduction, use or disclosure to third parties without express authority is strictly forbidden. © Copyright ABB

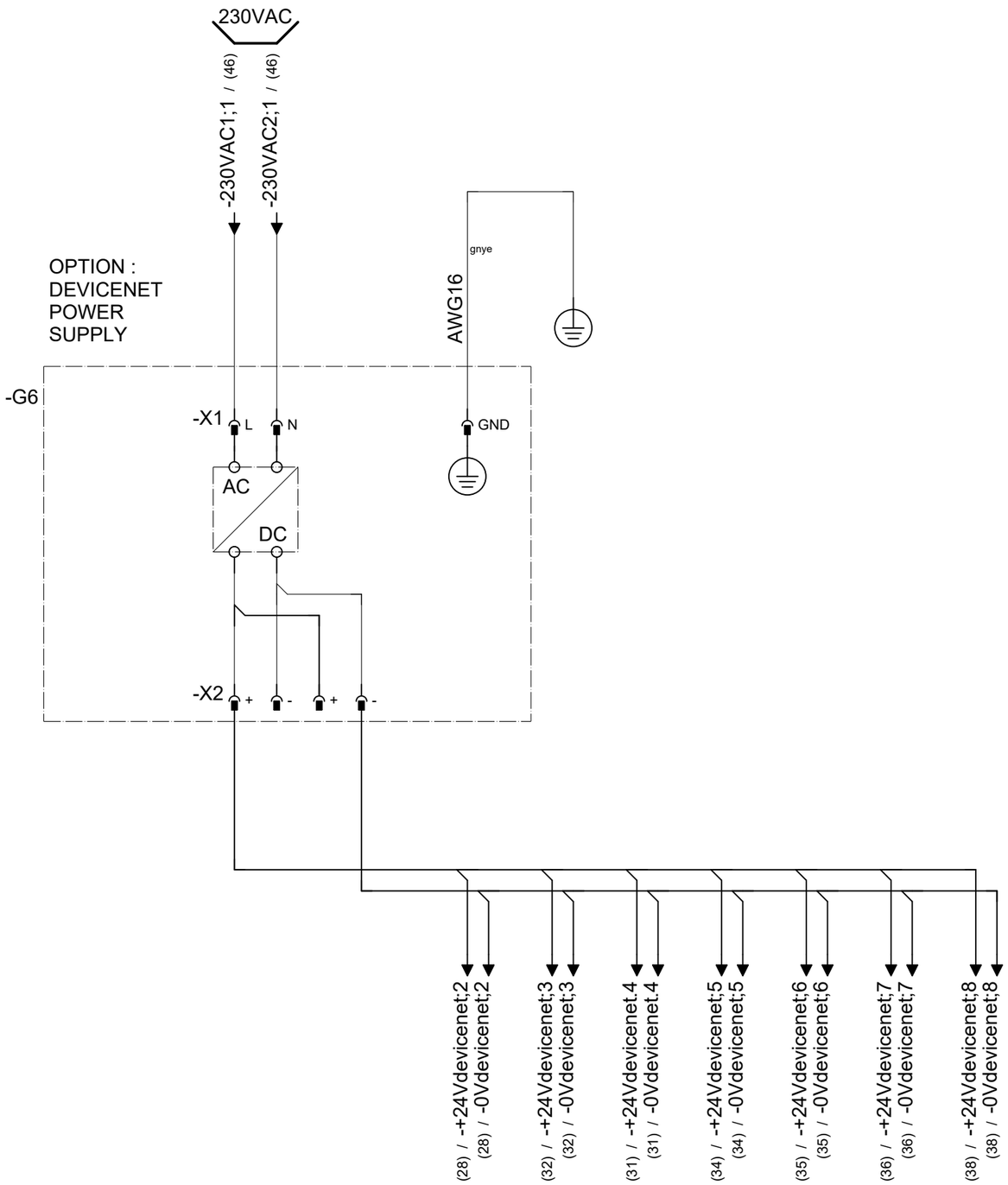

Latest revision:		ABB	Lab/Office: RA/RDP	PMC DESIGN 15 Rel: 24B OPTION : POWER SUPPLY DEVICENET	Status: Approved	Plant: = Location: + Sublocation: +
Prepared by, date: A Hägglund	Approved by, date: S Hällgren 2024-03-15				Document no. 3HAC026871-020	Rev. Ind 15
						Page 16 Next 16.5 Total 125

We reserve all rights in this document and in the information contained therein. Reproduction, use or disclosure to third parties without express authority is strictly forbidden. © Copyright ABB

Block diagram for the Run chain in A21 Panel board and S21 Control Panel with Options.

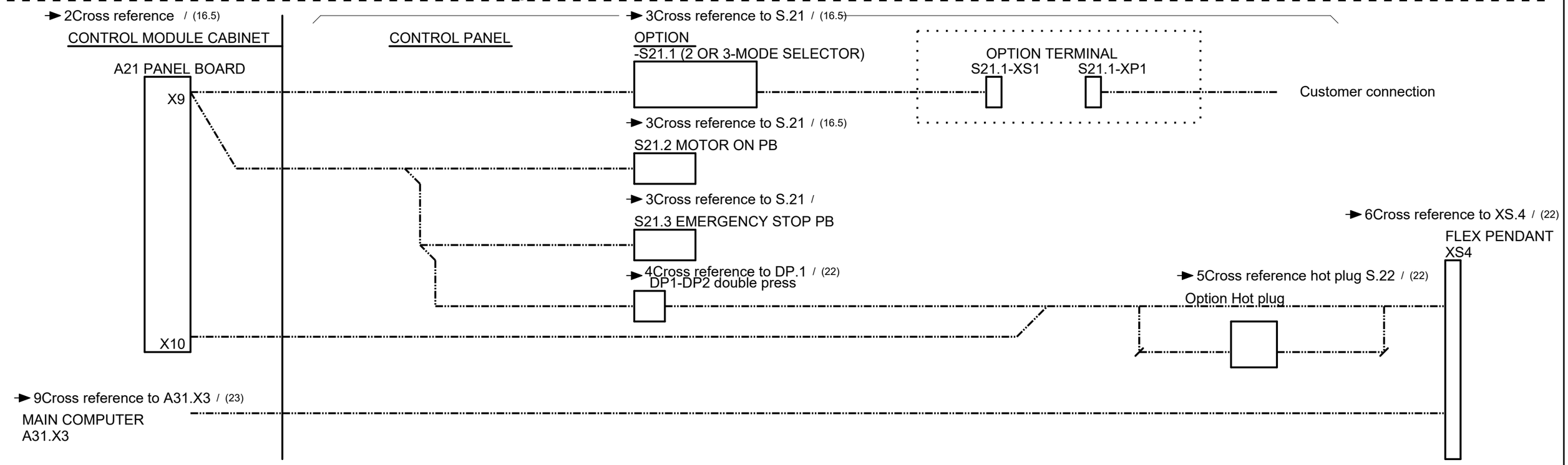

Block diagram for the Run chain and External Control Panel with Options.

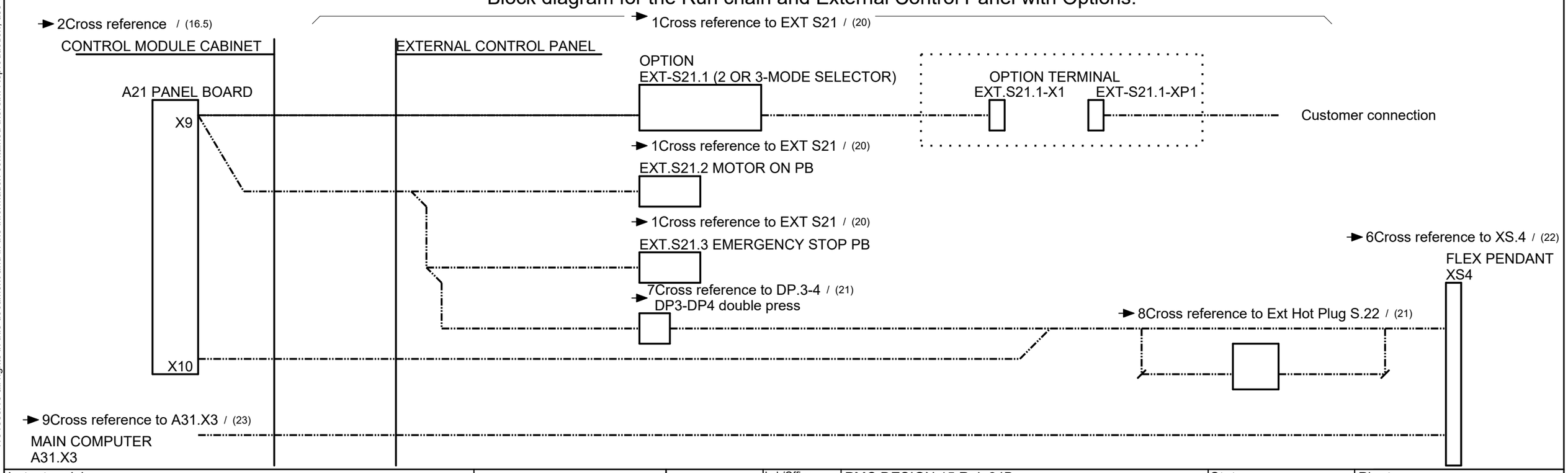

Latest revision:		Lab/Office: RA/RDP	PMC DESIGN 15 Rel: 24B RUN CHAIN block diagram in PANEL BOARD A21 and CONTROL PANEL S21	Status: Approved	Plant: = Location: + Sublocation: +
Prepared by, date: A Hägglund	Approved by, date: S Hällgren 2024-03-15			Document no. 3HAC026871-020	Rev. Ind 15

We reserve all rights in this document and in the information contained therein. Reproduction, use or disclosure to third parties without express authority is strictly forbidden. © Copyright ABB

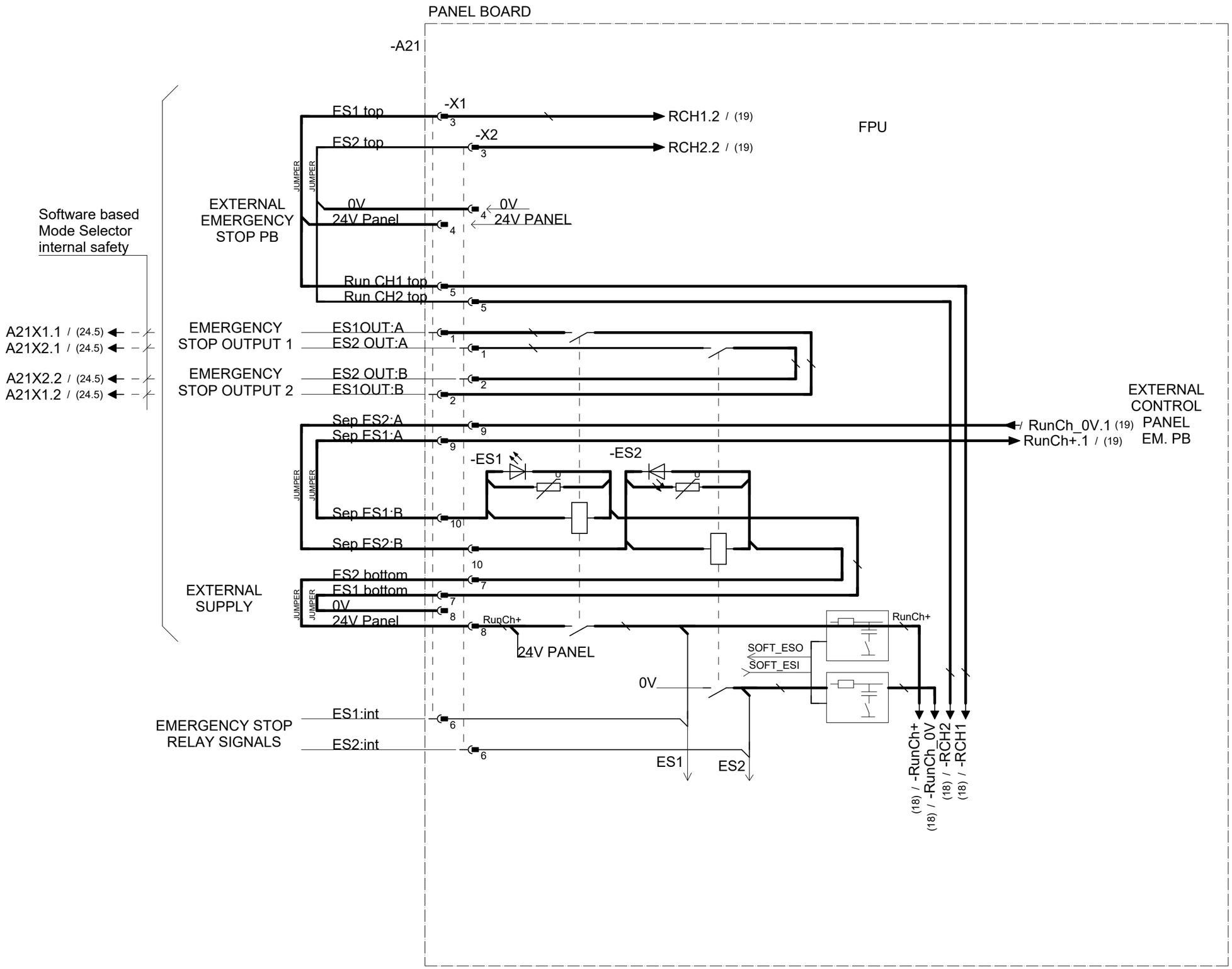

Latest revision:		ABB	Lab/Office: RA/RDP	PMC DESIGN 15 Rel: 24B RUN CHAIN and PANEL BOARD A21 Sh. 1 of 3	Status: Approved	Plant: = Location: + Sublocation: +
Prepared by, date: A Hägglund	Approved by, date: S Hällgren 2024-03-15				Document no. 3HAC026871-020	Rev. Ind 15
						Page 17 Next 18 Total 125

We reserve all rights in this document and in the information contained therein. Reproduction, use or disclosure to third parties without express authority is strictly forbidden. © Copyright ABB

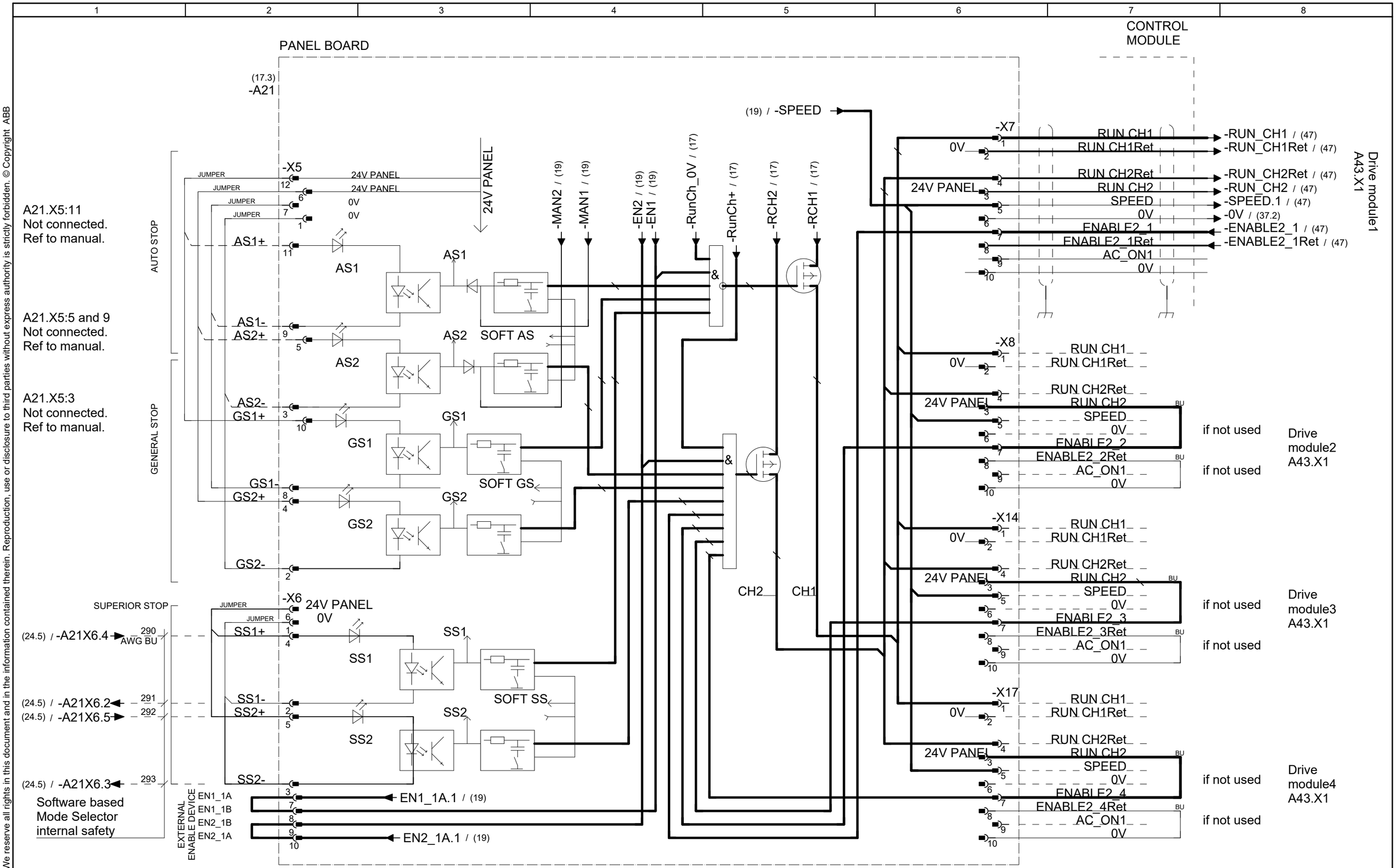

Latest revision:		Lab/Office: RA/RDP	PMC DESIGN 15 Rel: 24B RUN CHAIN and PANEL BOARD A21 Sh. 2 of 3	Status: Approved	Plant: = Location: + Sublocation: +
				Document no. 3HAC026871-020	Rev. Ind 15
					Page 18 Next 19 Total 125
Prepared by, date: A Hägglund	Approved by, date: S Hällgren 2024-03-15				

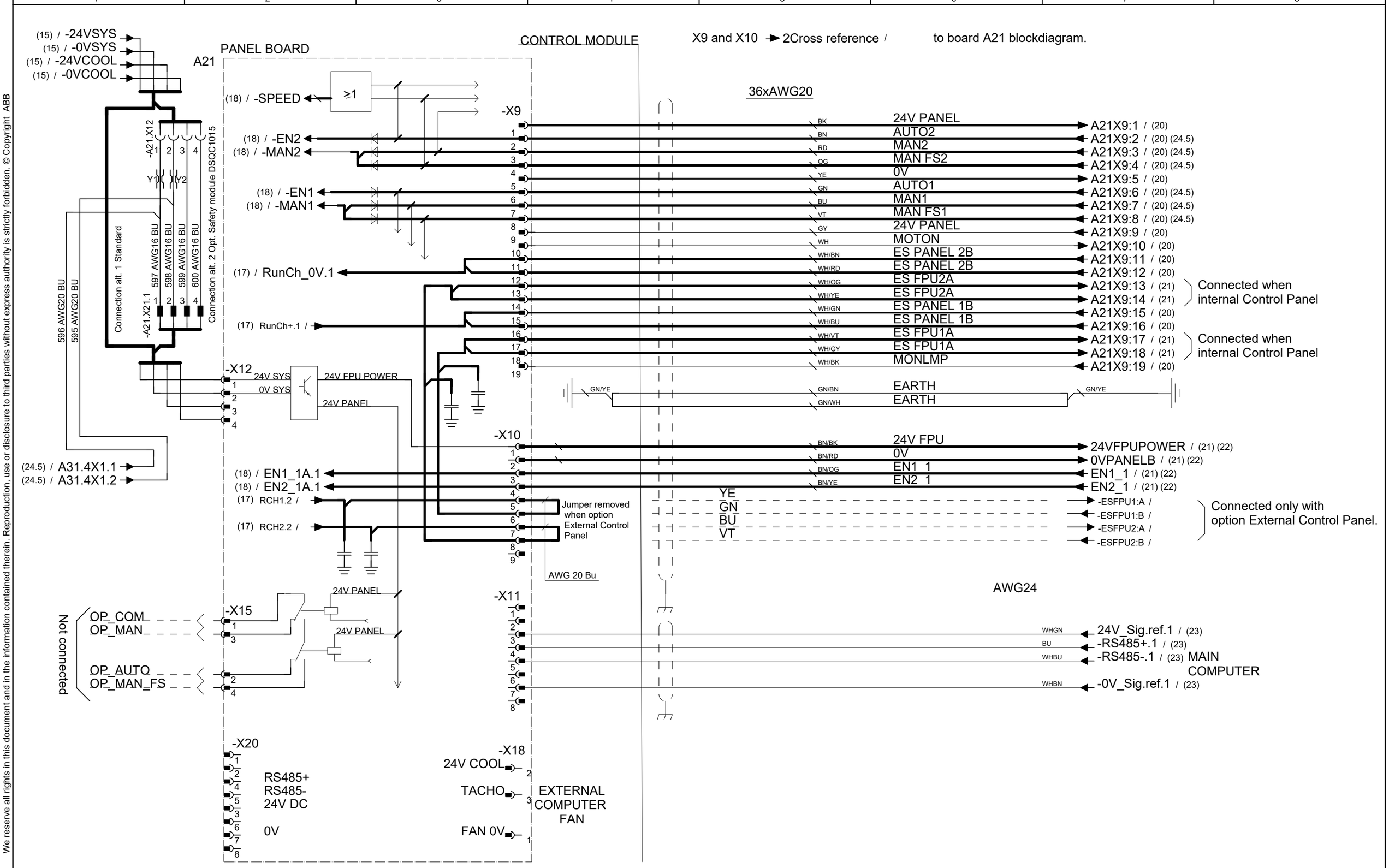

We reserve all rights in this document and in the information contained therein. Reproduction, use or disclosure to third parties without express authority is strictly forbidden. © Copyright ABB

Latest revision:		ABB	Lab/Office: RA/RDP	PMC DESIGN 15 Rel: 24B RUN CHAIN and PANEL BOARD A21 Sh. 3 of 3	Status: Approved
					Plant: = Location: + Sublocation: +
Prepared by, date: A Hägglund	Approved by, date: S Hällgren 2024-03-15				Document no. 3HAC026871-020
					Rev. Ind 15
					Page 19 Next 20 Total 125

We reserve all rights in this document and in the information contained therein. Reproduction, use or disclosure to third parties without express authority is strictly forbidden. © Copyright ABB

1Cross reference to EXT S21 / (16.5) (16.5) (16.5)

Ext.Controll Panel Box Sh.1 of 2
-EXT-S21

2 Mode selector, Option for Run chain Ext.Operating.

2 and 3 Mode selector is not used with software switch.

(19) / A21X9:3 — RD — -222 AWG20
(19) / A21X9:2 — BN — -221 AWG20
(19) / A21X9:7 — BU — -226 AWG20
(19) / A21X9:6 — GN — -225 AWG20

2-MODE SELECTOR
-EXT-S21.1
AUTO MAN AUTO MAN
1 3 5 7
2 6

Option: Extended 2 Mode Selector see sheet. ◄ Ext_Extended_2_Mode / (20.1) (20.1)

(19) / A21X9:5 — YE — -224 AWG20
(19) / A21X9:1 — BK — -220 AWG20

3 Mode selector is optional for
Run chain Operating.

(19) / A21X9:8 — VT — -227AWG20
(19) / A21X9:4 — OG — -223AWG20

3-MODE SELECTOR
-EXT-S21.1
AUTO MAN MAN 100% AUTO MAN MAN 100%
6 12 10 2 4 8
5 1

Option: Extended 3 Mode Selector see sheet. ◄ Ext_Extended_3_Mode / (20.1) (20.1)

MOTOR ON PB
-EXT-S21.2
14 13
X2 X1

(19) / A21X9:10 — WH — -229 AWG20
(19) / A21X9:19 — WH/BK — -230 AWG20
(19) / A21X9:9 — GY — -228 AWG20

EMERGENCY PB
-EXT-S21.3
21 22
11 12

DP6 / (21) — -DP6 1 — -237 AWG20 ES panel 1:A
-238 AWG20 ES panel 1:A
DP5 / (21) — -DP5 1 — -233 AWG20 ES panel 2:A
-234 AWG20 ES panel 2:A

(19) / A21X9:11 — WH/BN — -231 AWG20 ES panel 2:B
(19) / A21X9:12 — WH/RD — -232 AWG20 ES panel 2:B
(19) / A21X9:15 — WH/GN — -235 AWG20 ES panel 1:B
(19) / A21X9:16 — WH/BU — -236 AWG20 ES panel 1:B

-PE1 — GN/YE — GN/BN — GN/WH — GN/YE — -PE1

Latest revision:		Lab/Office: RA/RDP	PMC DESIGN 15 Rel: 24B RUN CHAIN A21 EXTERNAL CONTROLL PANEL/BOX , 2 & 3 MODE SELECTOR, EM.STOP	Status: Approved	Plant: = Location: + Sublocation: +
Prepared by, date: A Hägglund	Approved by, date: S Hällgren 2024-03-15			Document no. 3HAC026871-020	Rev. Ind 15

EXTERNAL CONTROL PANEL/BOX Sh.2
-EXT-S21

Option: Extended 2 Mode Selector
Run chain Operating

(20) / Ext_Extended_2_Mode ◄

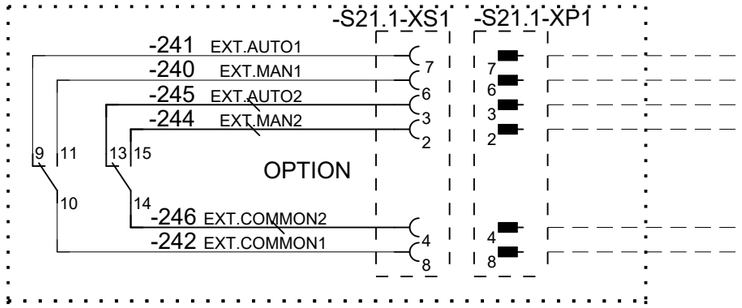

Customer connection

Option: Extended 3 Mode Selector
Run chain Operating

(20) / Ext_Extended_3_Mode ◄

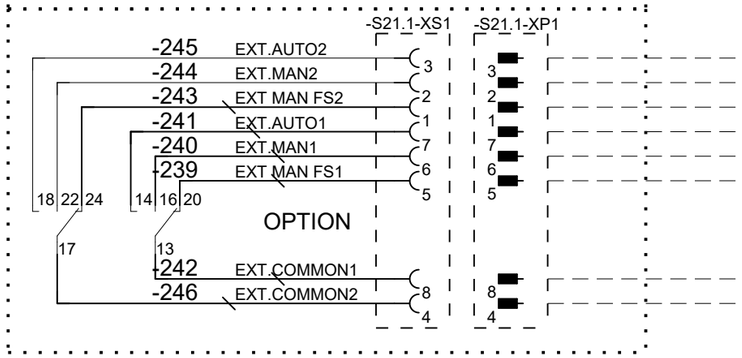

Customer connection

Option:With Safety board
Run chain Operating,
Extended 2 Mode Selector

(20) / Ext_Extended_2_Mode ◄

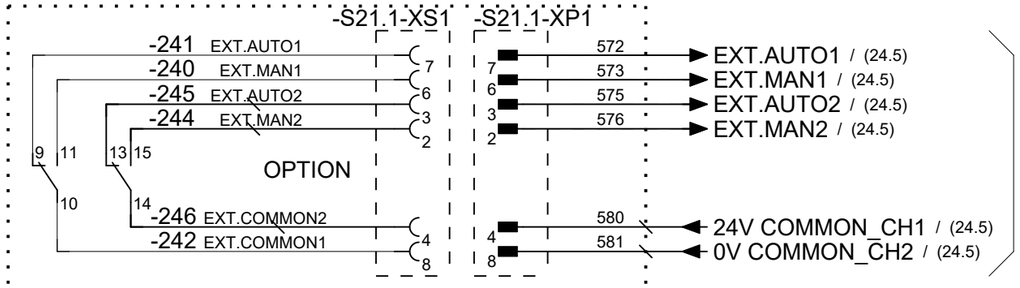

Hardware based Mode switch

Option:With Safety board
Run chain Operating,
Extended 3 Mode Selector

(20) / Ext_Extended_3_Mode ◄

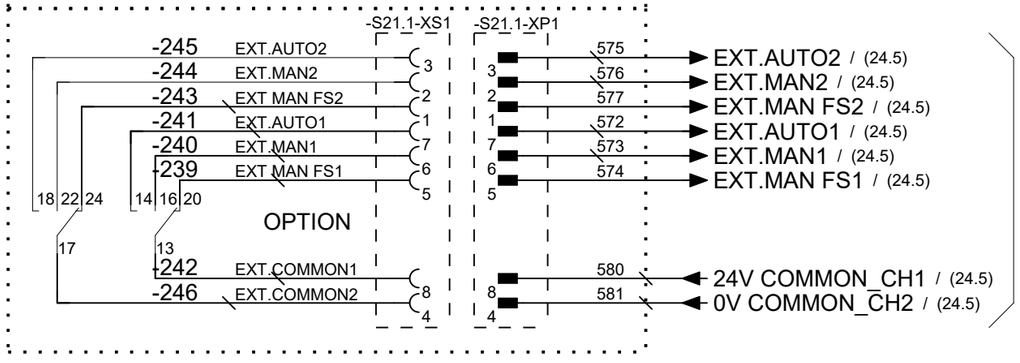

Hardware based Mode switch

We reserve all rights in this document and in the information contained therein. Reproduction, use or disclosure to third parties without express authority is strictly forbidden. © Copyright ABB

Latest revision:		Lab/Office: RA/RDP	PMC DESIGN 15 Rel: 24B EXTERNAL CONTROLL PANEL/BOX RUN CHAIN EXT.S21, 2 & 3 MODE SELECTOR	Status: Approved	Plant: = Location: + Sublocation: +
Prepared by, date: A Hägglund	Approved by, date: S Hällgren 2024-03-15			Document no. 3HAC026871-020	Rev. Ind 15

We reserve all rights in this document and in the information contained therein. Reproduction, use or disclosure to third parties without express authority is strictly forbidden. © Copyright ABB

8Cross reference to Ext Hot Plug S.22 / (16.5)

Option:Hot plug from Rel.11.1

7Cross reference to DP.3-4 / (16.5)

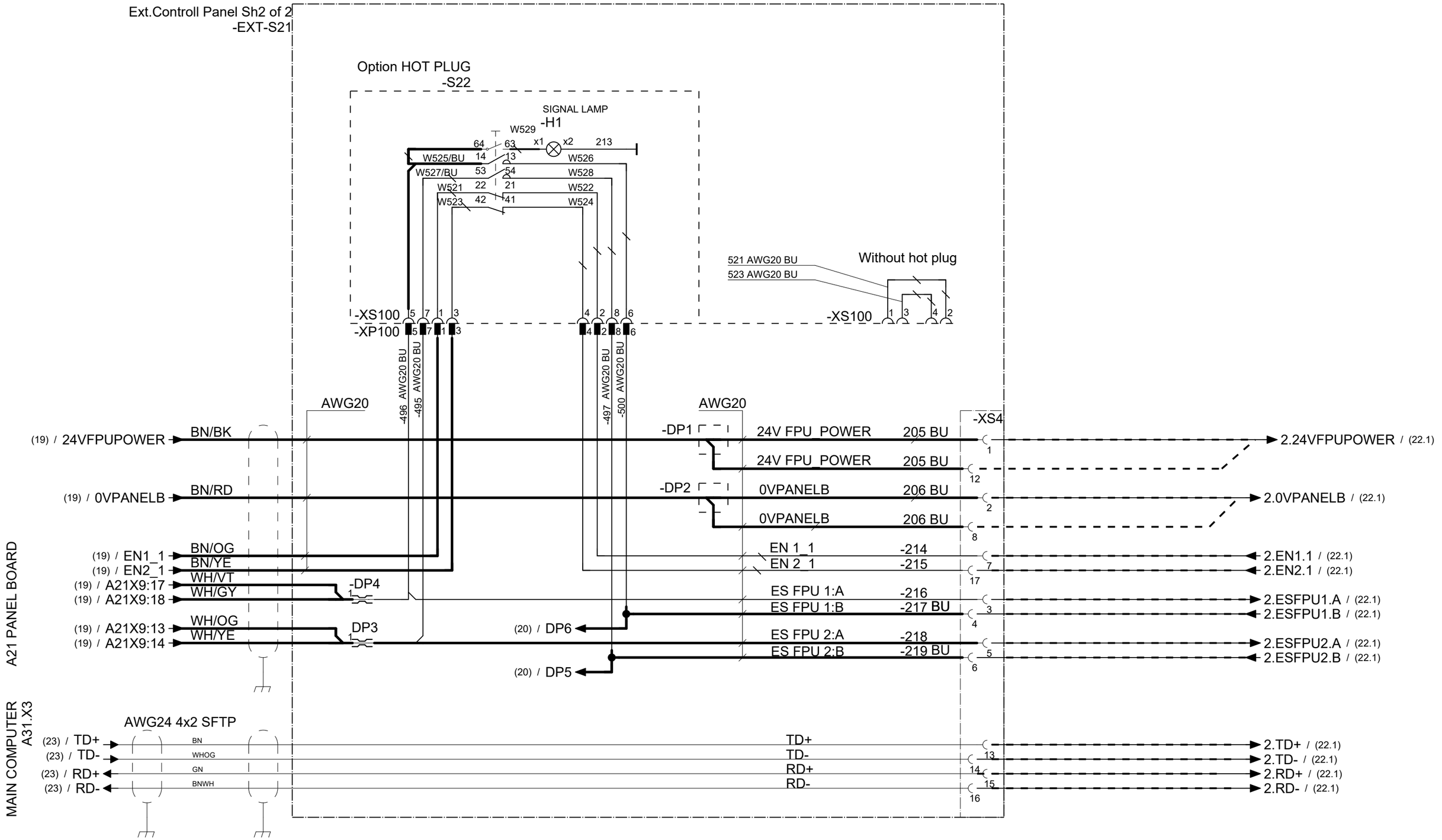

Latest revision:		Lab/Office: RA/RDP	PMC DESIGN 15 Rel: 24B RUN CHAIN EXT A21 OPERATING WITH OPT: HOT PLUG rel 11.1	Status: Approved	Plant: = Location: + Sublocation: +
Prepared by, date: A Hägglund	Approved by, date: S Hällgren 2024-03-15			Document no. 3HAC026871-020	Rev. Ind 15

We reserve all rights in this document and in the information contained therein. Reproduction, use or disclosure to third parties without express authority is strictly forbidden. © Copyright ABB

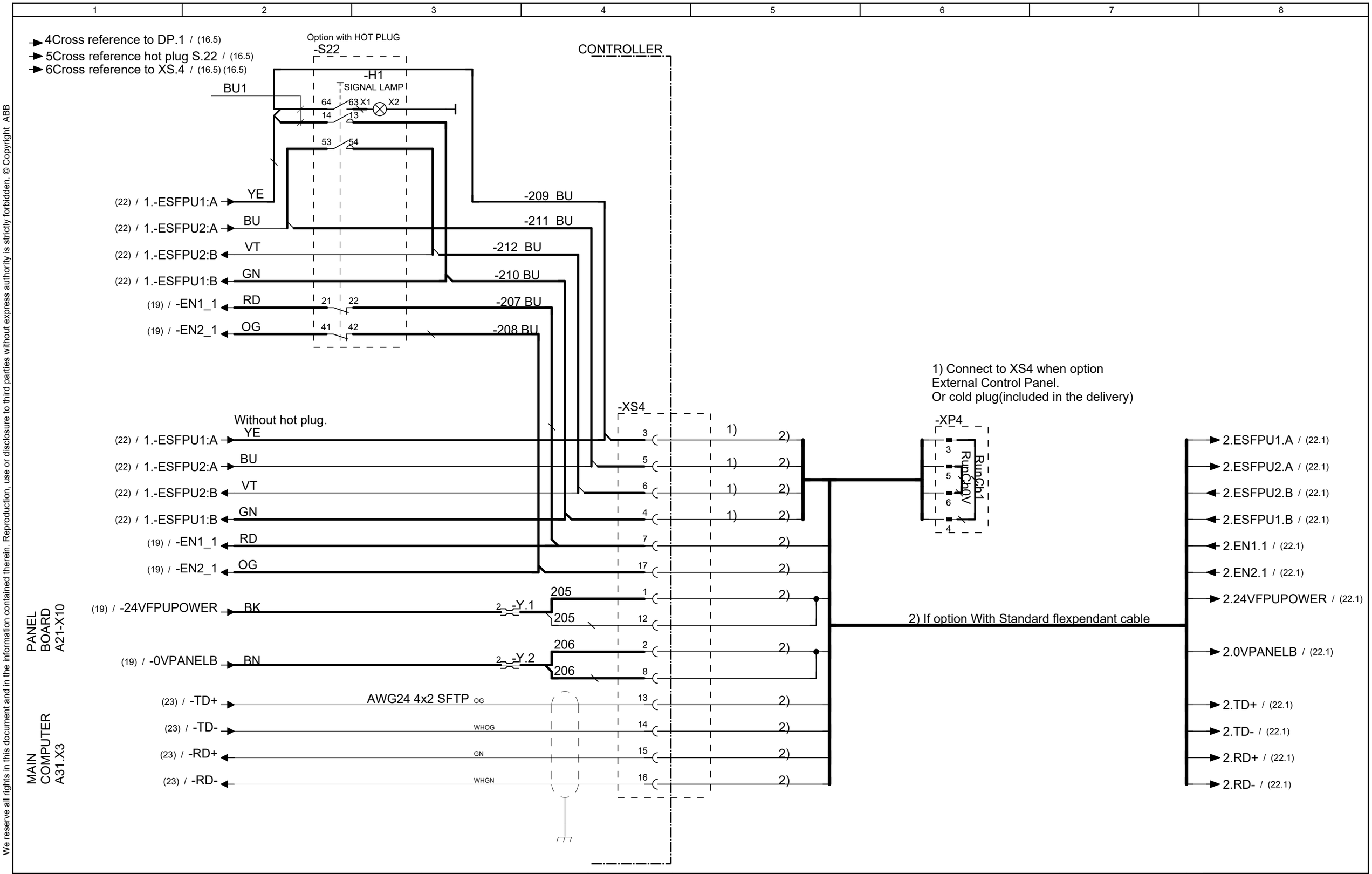

Latest revision:		Lab/Office: RA/RDP	PMC DESIGN 15 Rel: 24B FPU, FLEXPENDANT and option HOT PLUG	Status: Approved	Plant: = Location: + Sublocation: +
				Document no. 3HAC026871-020	Rev. Ind 15
					Page 22 Next 22.1 Total 125
Prepared by, date: A Hägglund	Approved by, date: S Hällgren 2024-03-15				

We reserve all rights in this document and in the information contained therein. Reproduction, use or disclosure to third parties without express authority is strictly forbidden. © Copyright ABB

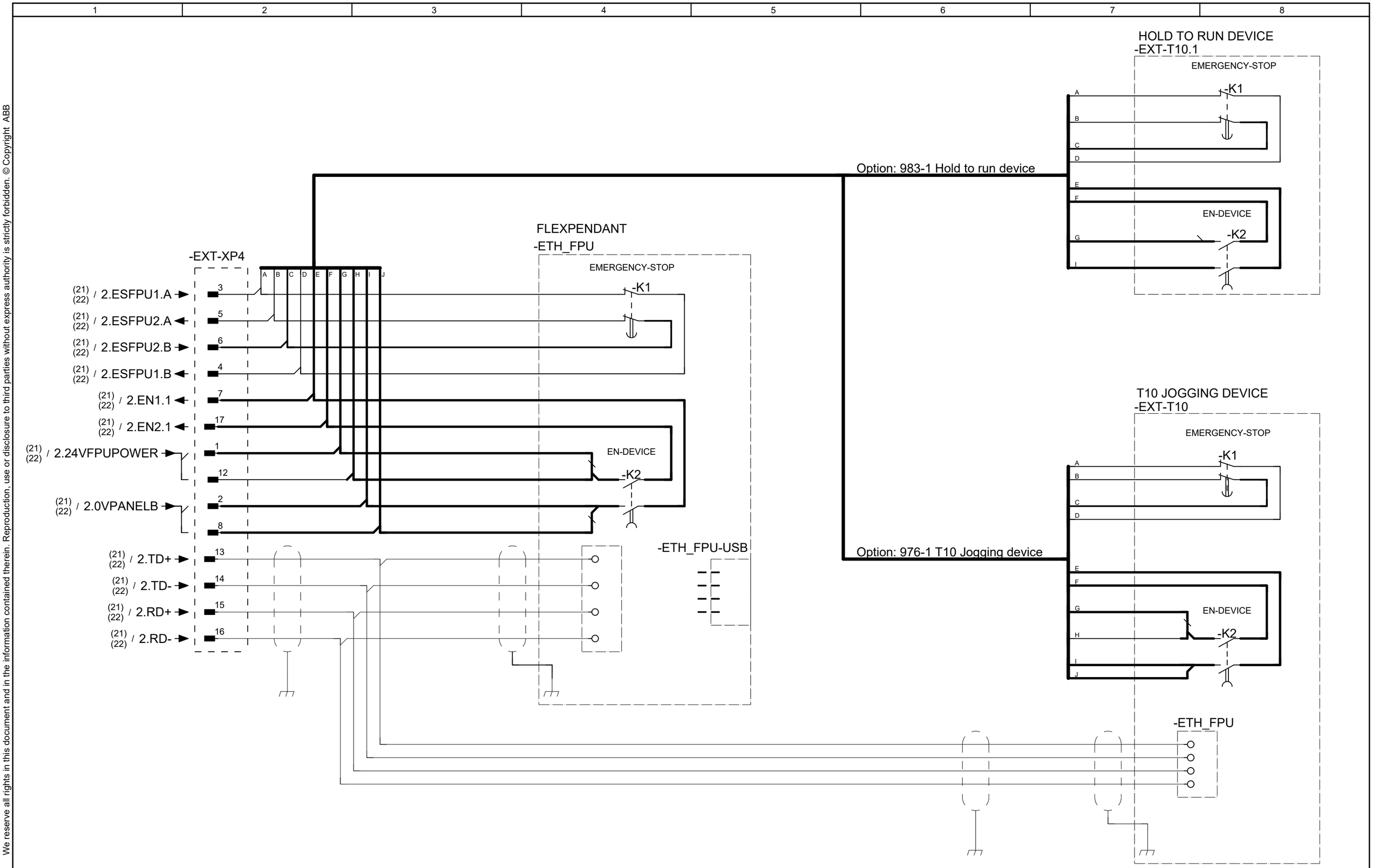

Latest revision:		Lab/Office: RA/RDP	PMC DESIGN 15 Rel: 24B FPU, FLEXPENDANT and Opt. HOLD TO RUN DEVICE T10 JOGGING DEVICE	Status: Approved	Plant: = Location: + Sublocation: +
Prepared by, date: A Hägglund	Approved by, date: S Hällgren 2024-03-15			Document no. 3HAC026871-020	Rev. Ind 15
					Page 22.1 Next 22.2 Total 125

We reserve all rights in this document and in the information contained therein. Reproduction, use or disclosure to third parties without express authority is strictly forbidden. © Copyright ABB

Harness: 3HAC055665-002,-003,-004

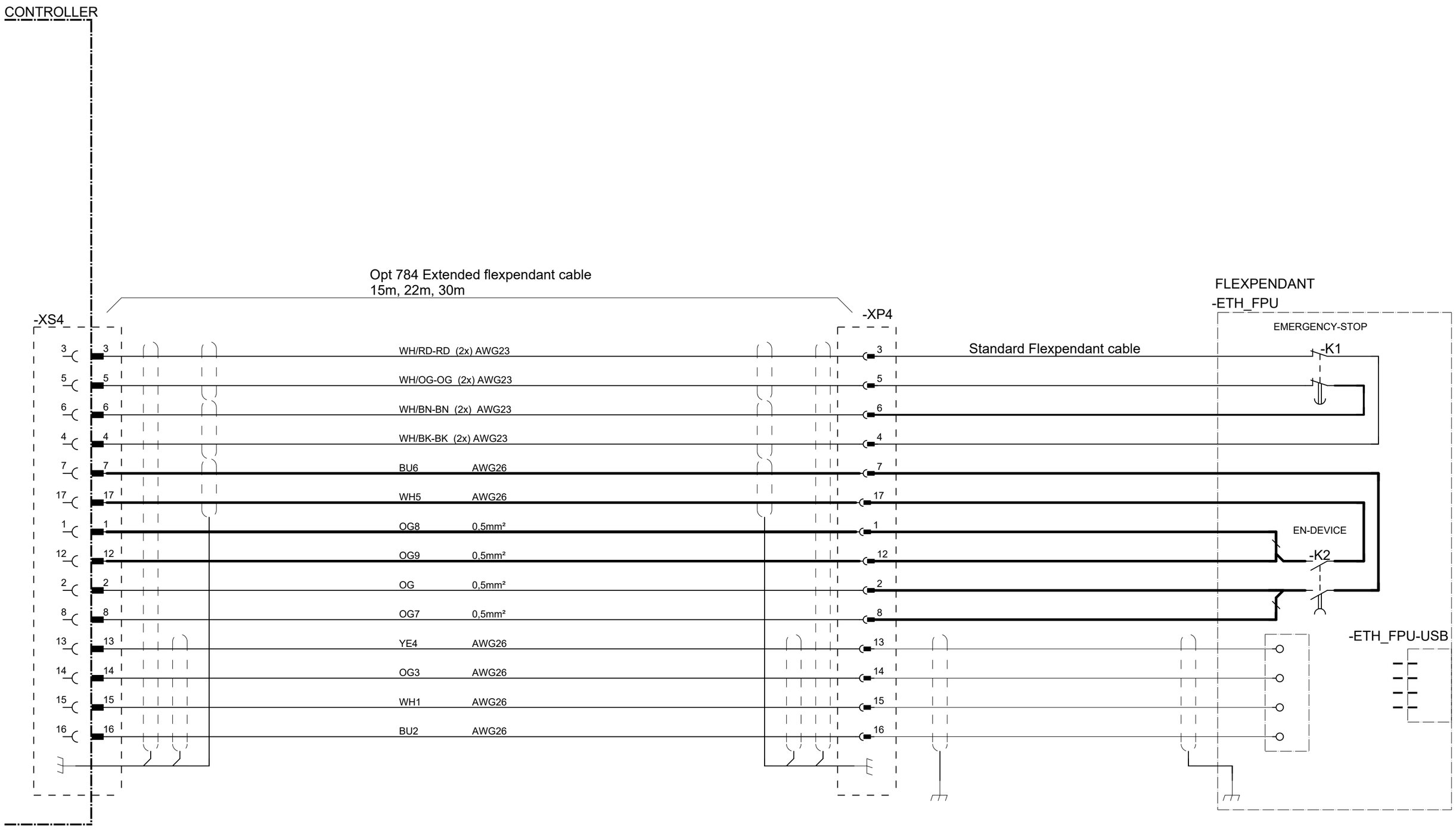

Latest revision:		ABB Lab/Office: RA/RDP	PMC DESIGN 15 Rel: 24B FPU, Extended FLEXPENDANT cable 15 - 30 m	Status: Approved	Plant: = Location: + Sublocation: +
				Document no. 3HAC026871-020	Rev. Ind 15
					Page 22.2 Next 23 Total 125
Prepared by, date: A Hägglund	Approved by, date: S Hällgren 2024-03-15				

We reserve all rights in this document and in the information contained therein. Reproduction, use or disclosure to third parties without express authority is strictly forbidden. © Copyright ABB

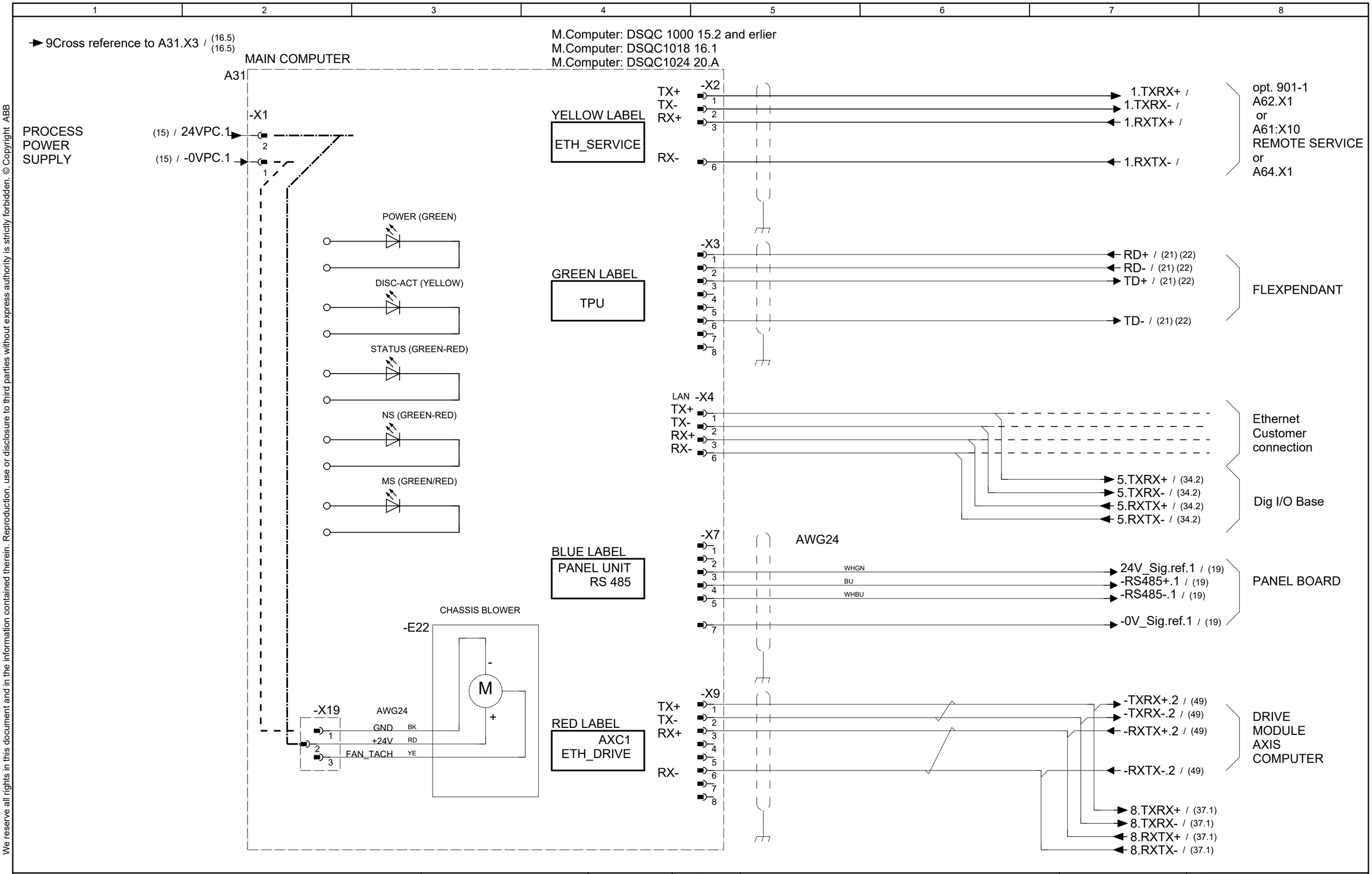

Latest revision:		Lab/Office: RA/RDP	PMC DESIGN 15 Rel: 24B MAIN COMPUTER DSQC1000/1018/1024	Status: Approved	Plant: = Location: + Sublocation: +
Prepared by, date: A Hägglund	Approved by, date: S Hällgren 2024-03-15			Document no. 3HAC026871-020	Rev. Ind 15

We reserve all rights in this document and in the information contained therein. Reproduction, use or disclosure to third parties without express authority is strictly forbidden. © Copyright ABB

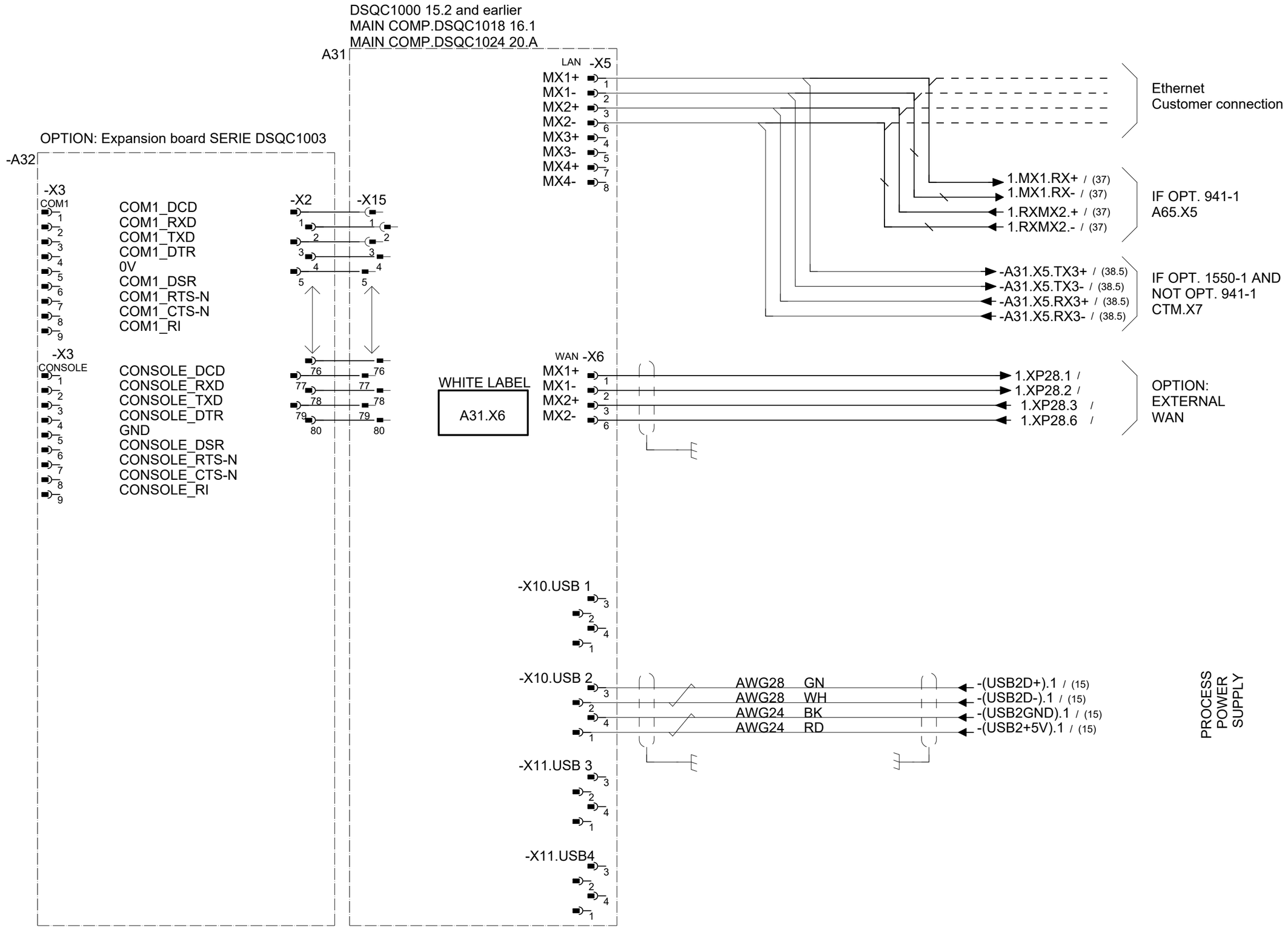

Latest revision:		Lab/Office: RA/RDP	PMC DESIGN 15 Rel: 24B MAIN COMPUTER DSQC1000/1018/1024	Status: Approved	Plant: = Location: + Sublocation: +
				Document no. 3HAC026871-020	Rev. Ind 15
Prepared by, date: A Hägglund	Approved by, date: S Hällgren 2024-03-15				Page 24 Next 24.3 Total 125

We reserve all rights in this document and in the information contained therein. Reproduction, use or disclosure to third parties without express authority is strictly forbidden. © Copyright ABB

Options:
996-1 Safety Module. ———
AND
735-1 Add. Contacts, 3 modes OR - - - - - -
735-2 Add. Contacts, 2 modes
AND
731-1 Safety internal connection. —·—·—·—

Internal-Hardware Safety switch conn.

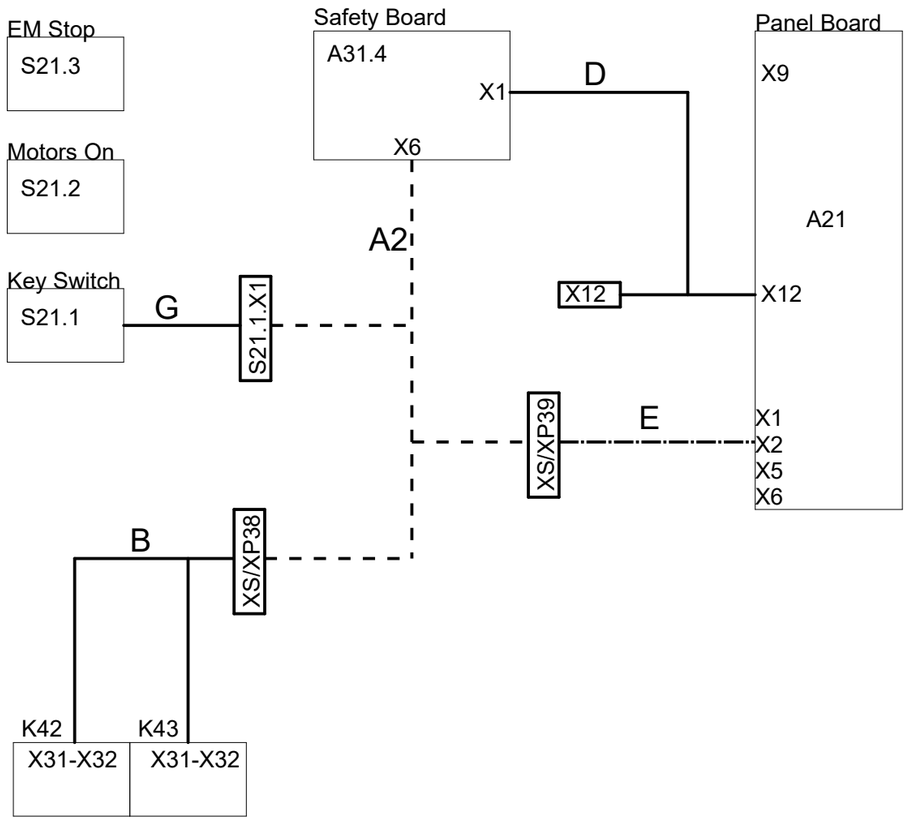

Options:
996-1 Safety Module. ———
AND
735-1 Add. Contacts, 3 modes OR - - - - - -
735-2 Add. Contacts, 2 modes
AND
731-2 Safety external connection. —·—·—·—

External-Hardware Safety switch conn.

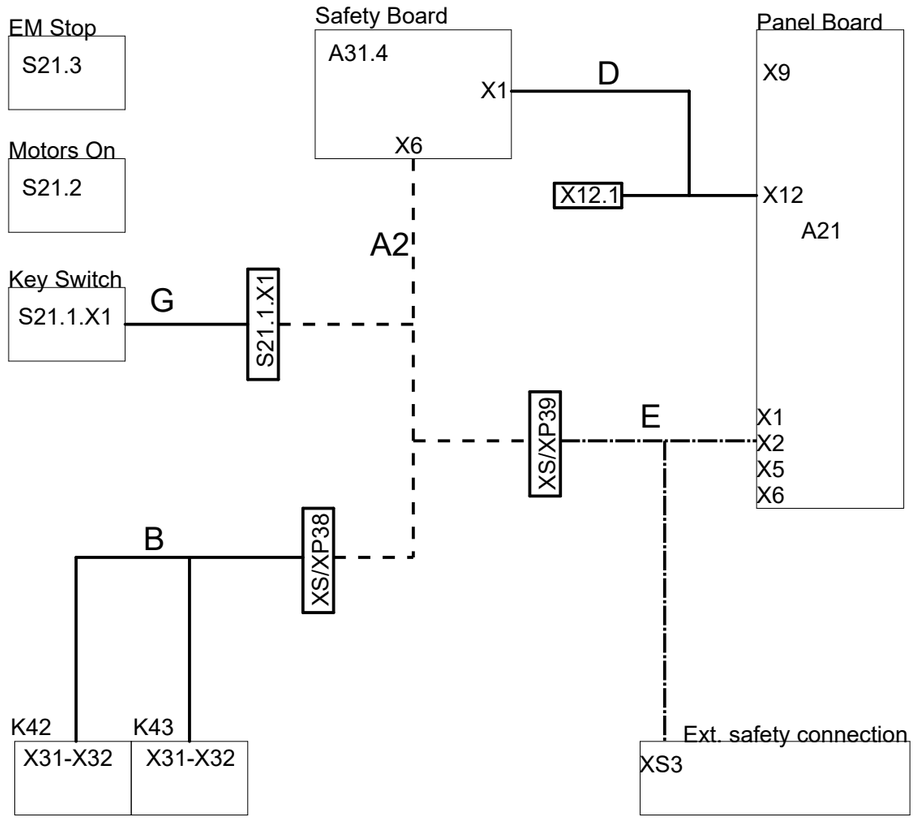

A = Re-designed Safety harness for Key-less	3HAC056648-001
A2 = Safety harness for hard Key switch	3HAC057150-001
B = Main Contactor supervision harness.	3HAC055642-001
C= Emergency Stop harness.	3HAC056527-001
D= +24V and 0V supply.	3HAC055633-001
E = Internal Safety Conn. harness. New design.	3HAC056638-001
F = External Safety Conn. New design.	3HAC056622-001
G = Extended Key switch harness.	3HAC023476-001

We reserve all rights in this document and in the information contained therein. Reproduction, use or disclosure to third parties without express authority is strictly forbidden. © Copyright ABB

Options:
With harness connection
996-1 Safety Module
AND
735-7 Keyless Selector 3 modes OR
735-8 Keyless Selector 2 modes
AND
731-1 Safety internal connection.

Software Internal Safety connection

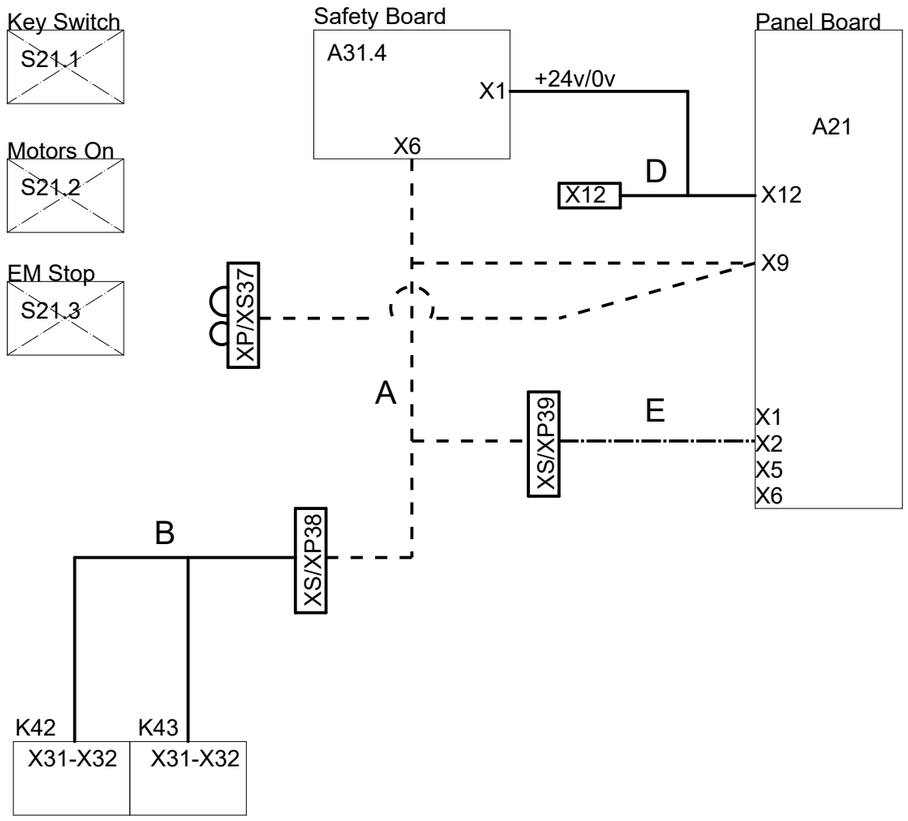

Options:
With harness connection
996-1 Safety Module
AND
735-7 Keyless Selector 3 modes OR
735-8 Keyless Selector 2 modes
AND
731-2 Safety External connection.

Software External Safety connection

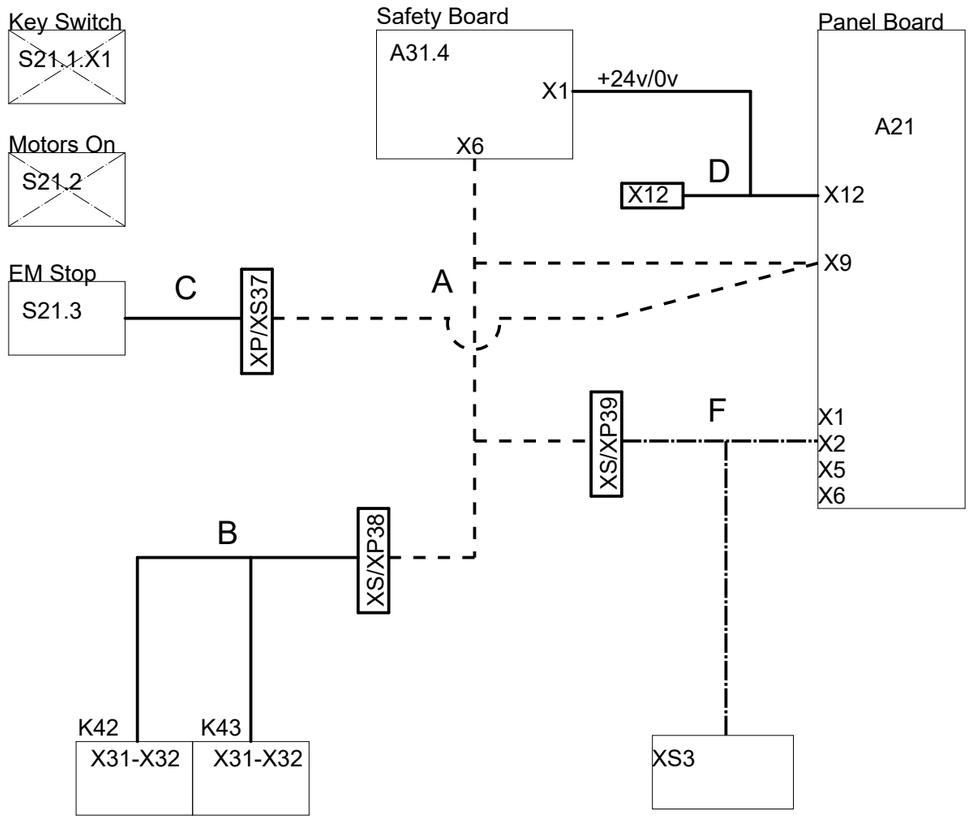

A = Re-designed Safety harness for Key-less	3HAC056648-001
B = Main Contactor supervision harness.	3HAC055642-001
C = Emergency Stop harness.	3HAC056527-001
D= +24V and 0V supply harness.	3HAC055633-001
E = Internal Safety Conn. New design.	3HAC056638-001
F = External Safety Conn. New design.	3HAC056622-001

We reserve all rights in this document and in the information contained therein. Reproduction, use or disclosure to third parties without express authority is strictly forbidden. © Copyright ABB

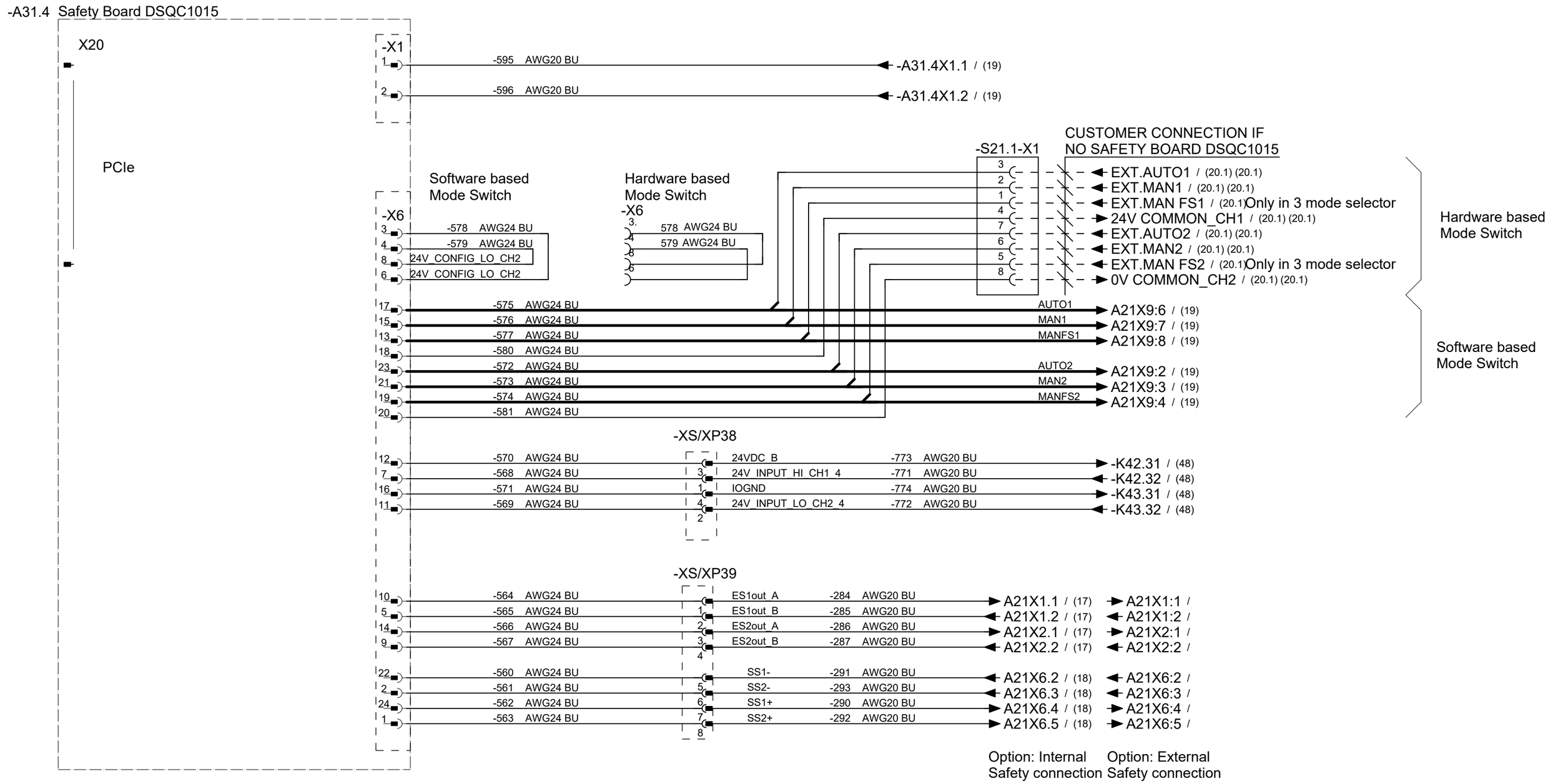

Latest revision:		Lab/Office: RA/RDP	PMC DESIGN 15 Rel: 24B SAFETY BOARD A31.4 DSQC1015 Hardware and Software based Mode Switch	Status: Approved	Plant: = Location: + Sublocation: +
Prepared by, date: A Hägglund	Approved by, date: S Hällgren 2024-03-15			Document no. 3HAC026871-020	Rev. Ind 15

We reserve all rights in this document and in the information contained therein. Reproduction, use or disclosure to third parties without express authority is strictly forbidden. © Copyright ABB

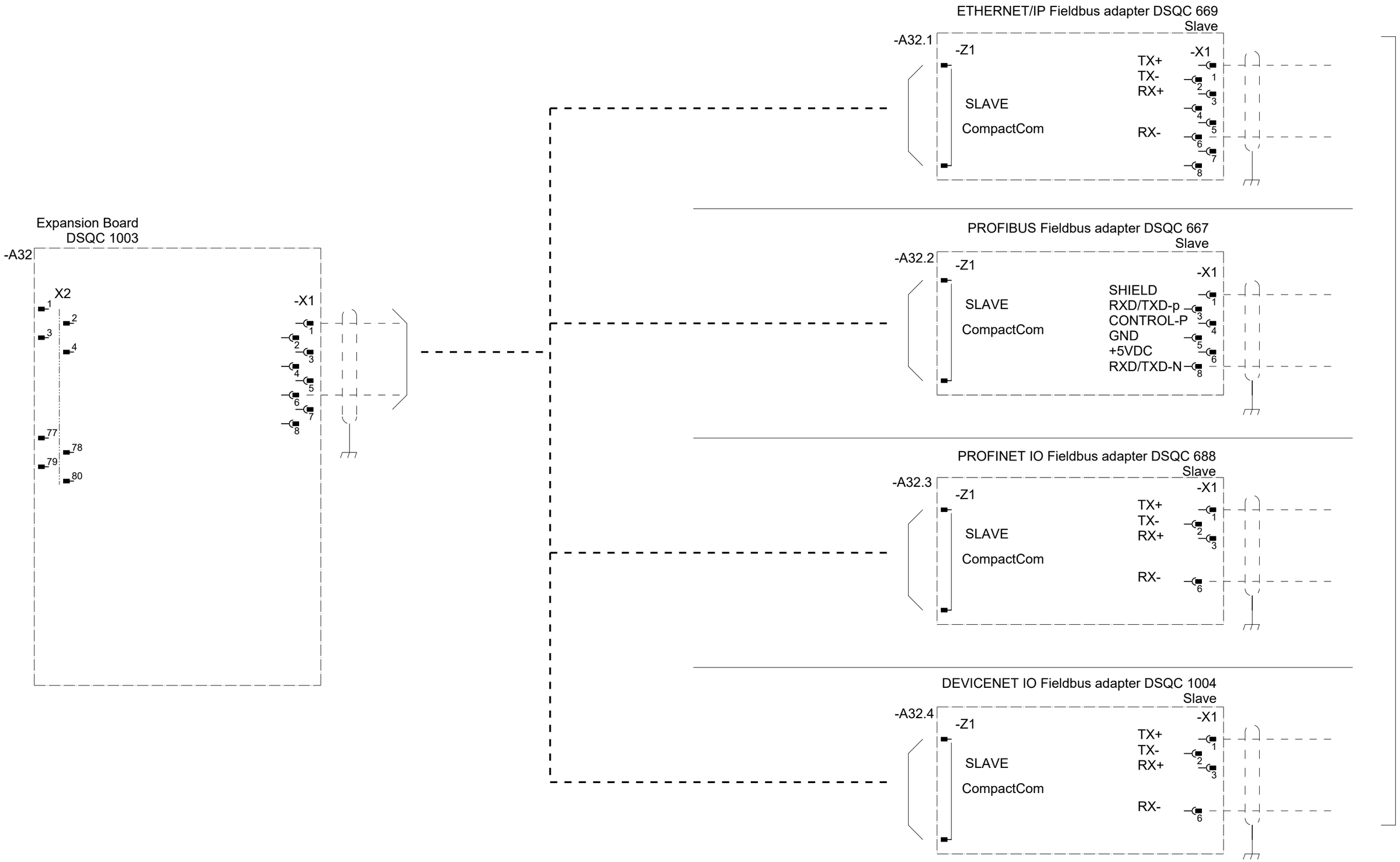

Latest revision:		Lab/Office: RA/RDP	PMC DESIGN 15 Rel: 24B FIELDBUS ADAPTER: ETHERNET/IP, PROFIBUS and PROFINET IO	Status: Approved	Plant: = Location: + Sublocation: +
Prepared by, date: A Hägglund	Approved by, date: S Hällgren 2024-03-15			Document no. 3HAC026871-020	Rev. Ind 15
					Page 25 Next 26 Total 125

We reserve all rights in this document and in the information contained therein. Reproduction, use or disclosure to third parties without express authority is strictly forbidden. © Copyright ABB

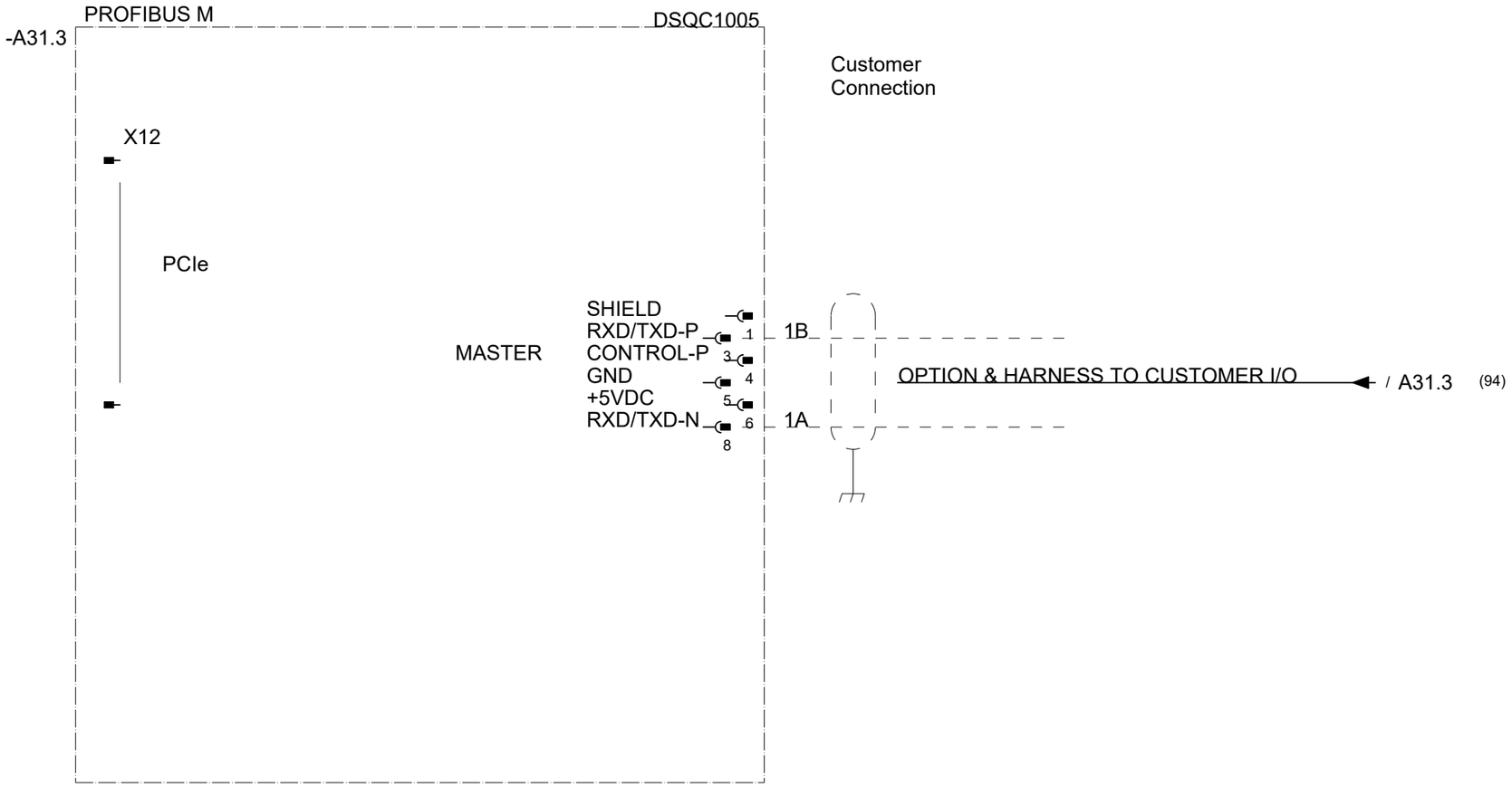

Latest revision:		Lab/Office: RA/RDP	PMC DESIGN 15 Rel: 24B PROFIBUS DP M	Status: Approved	Plant: = Location: + Sublocation: +	
				Document no. 3HAC026871-020	Rev. Ind 15	Page 26 Next 27 Total 125
Prepared by, date: A Hägglund	Approved by, date: S Hällgren 2024-03-15					

We reserve all rights in this document and in the information contained therein. Reproduction, use or disclosure to third parties without express authority is strictly forbidden. © Copyright ABB

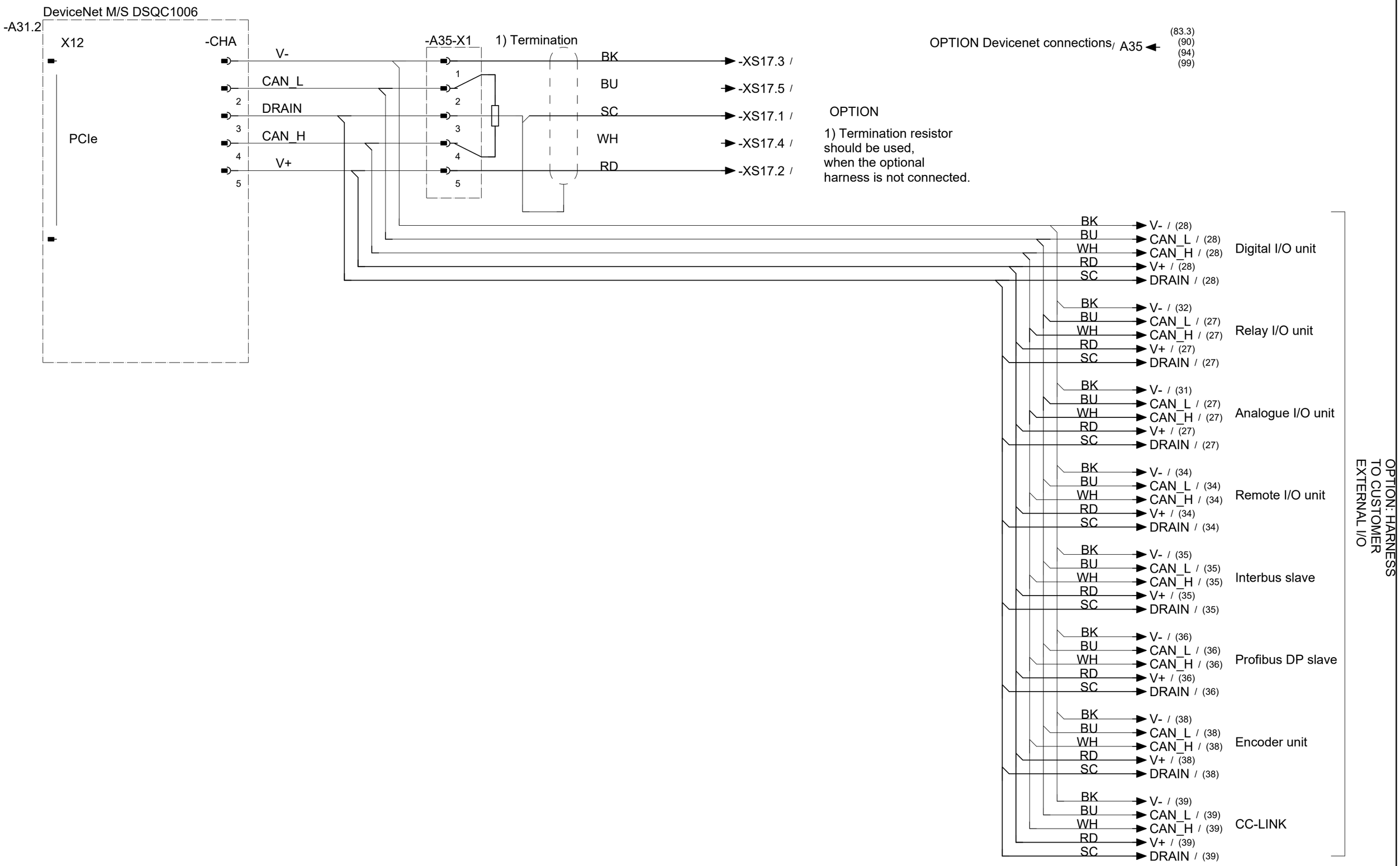

Latest revision:		Lab/Office: RA/RDP	PMC DESIGN 15 Rel: 24B DEVICENET ADAPTER	Status: Approved	Plant: = Location: + Sublocation: +
Prepared by, date: A Hägglund	Approved by, date: S Hällgren 2024-03-15			Document no. 3HAC026871-020	Rev. Ind 15

We reserve all rights in this document and in the information contained therein. Reproduction, use or disclosure to third parties without express authority is strictly forbidden. © Copyright ABB

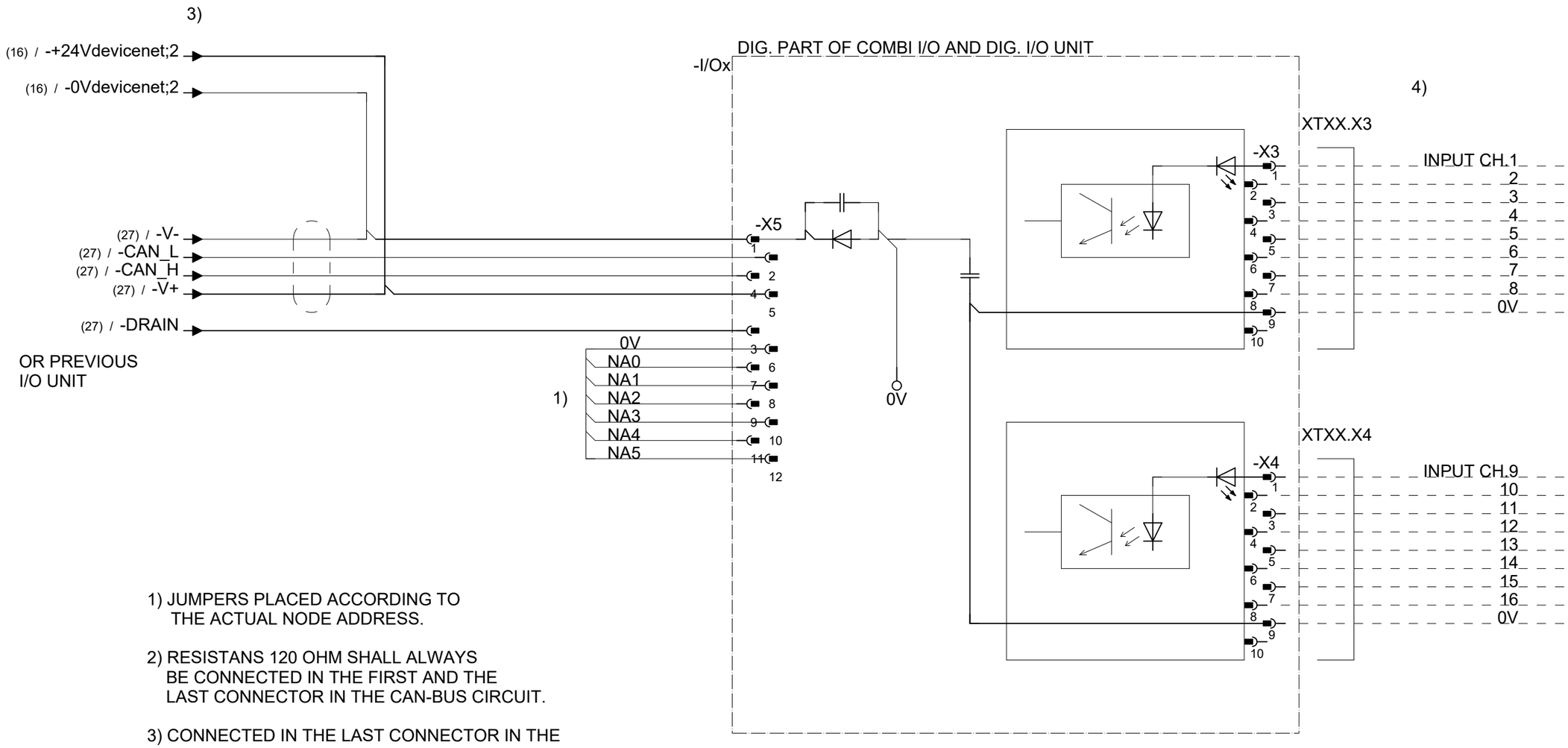

1) JUMPERS PLACED ACCORDING TO
THE ACTUAL NODE ADDRESS.

2) RESISTANS 120 OHM SHALL ALWAYS
BE CONNECTED IN THE FIRST AND THE
LAST CONNECTOR IN THE CAN-BUS CIRCUIT.

3) CONNECTED IN THE LAST CONNECTOR IN THE
CAN-BUS CIRCUIT.

4) FOR COMBI I/O DSQC 651, 8 INPUT, NO X4.
FOR DIGITAL I/O DSQC 652, 16 INPUT, X3 AND X4.

We reserve all rights in this document and in the information contained therein. Reproduction, use or disclosure to third parties without express authority is strictly forbidden. © Copyright ABB

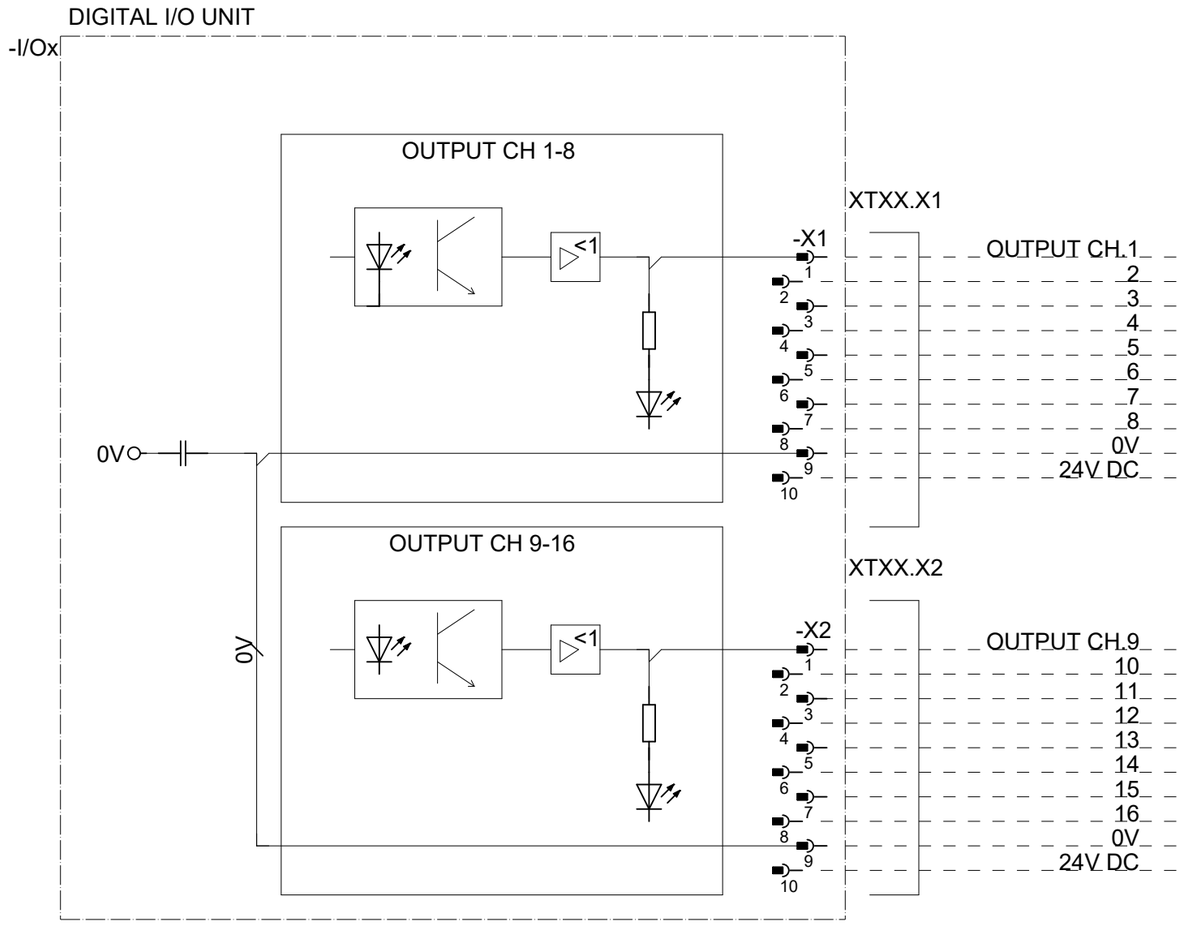

Latest revision:		ABB	Lab/Office: RA/RDP	PMC DESIGN 15 Rel: 24B DIGITAL I/O UNIT	Status: Approved	Plant: = Location: + Sublocation: +
Prepared by, date: A Hägglund	Approved by, date: S Hällgren 2024-03-15				Document no. 3HAC026871-020	Rev. Ind 15
						Page 29 Next 30 Total 125

We reserve all rights in this document and in the information contained therein. Reproduction, use or disclosure to third parties without express authority is strictly forbidden. © Copyright ABB

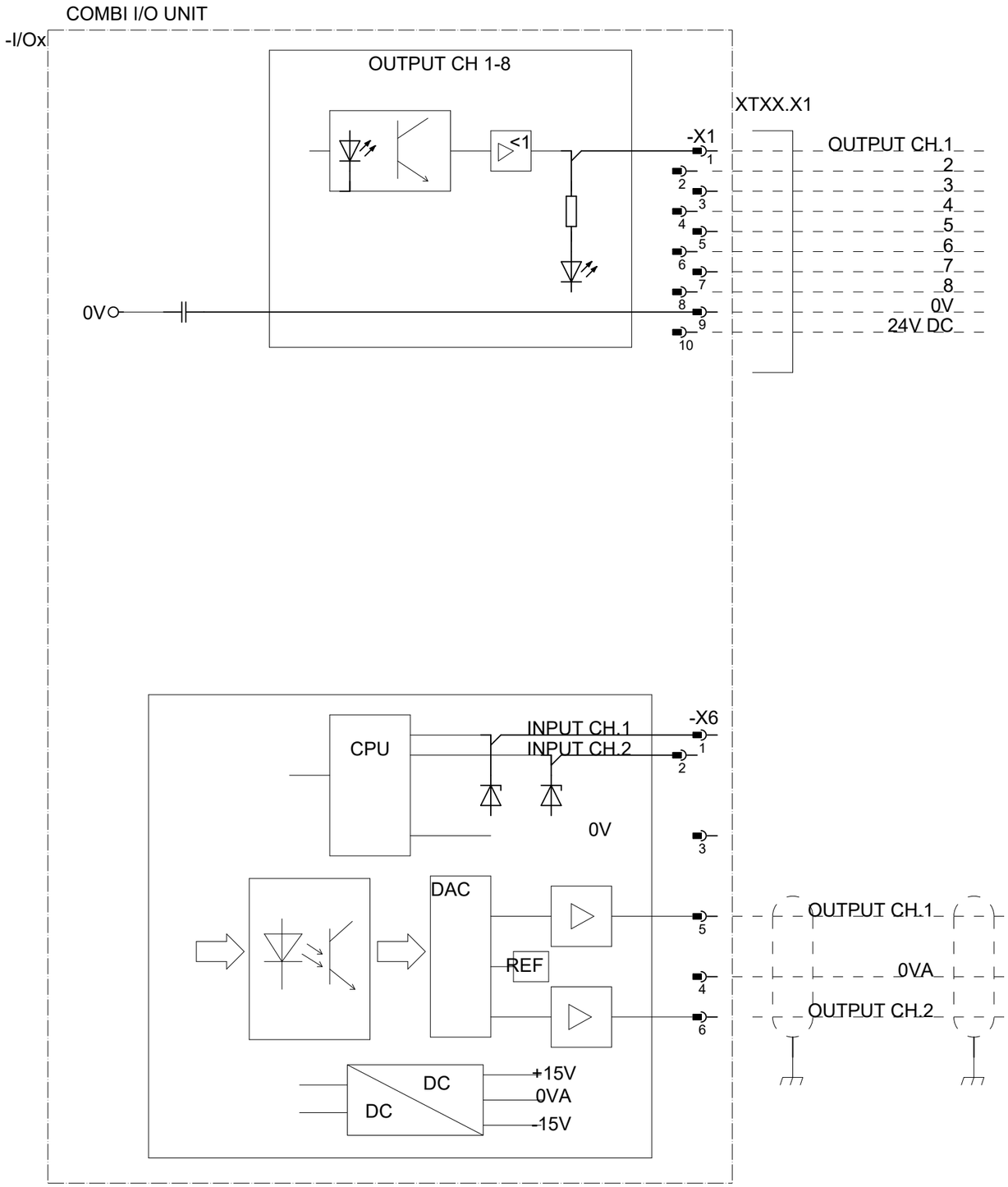

Latest revision:		Lab/Office: RA/RDP	PMC DESIGN 15 Rel: 24B COMBI I/O UNIT	Status: Approved	Plant: = Location: + Sublocation: +
Prepared by, date: A Hägglund	Approved by, date: S Hällgren 2024-03-15			Document no. 3HAC026871-020	Rev. Ind 15

We reserve all rights in this document and in the information contained therein. Reproduction, use or disclosure to third parties without express authority is strictly forbidden. © Copyright ABB

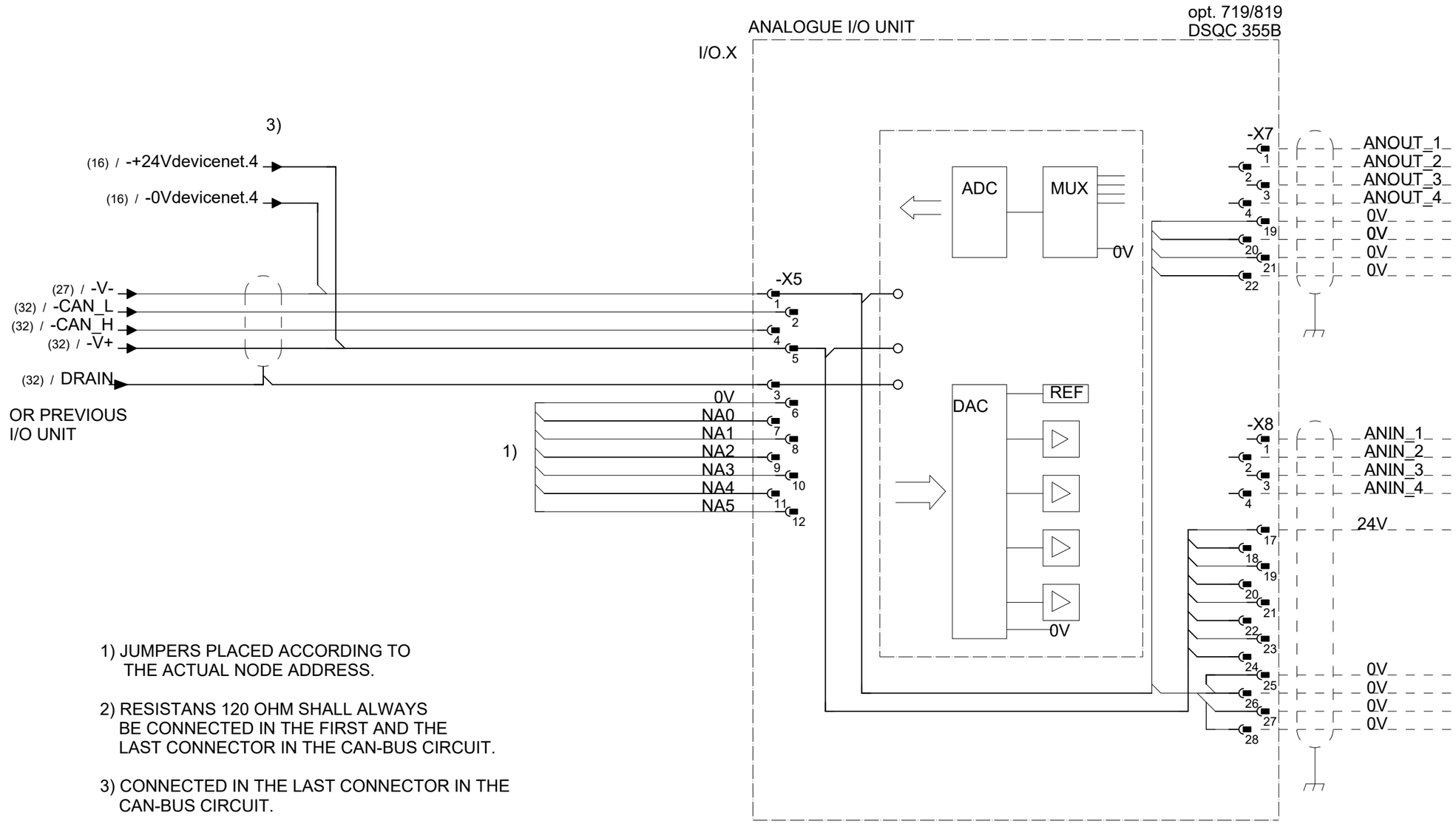

1) JUMPERS PLACED ACCORDING TO
THE ACTUAL NODE ADDRESS.

2) RESISTANS 120 OHM SHALL ALWAYS
BE CONNECTED IN THE FIRST AND THE
LAST CONNECTOR IN THE CAN-BUS CIRCUIT.

3) CONNECTED IN THE LAST CONNECTOR IN THE
CAN-BUS CIRCUIT.

We reserve all rights in this document and in the information contained therein. Reproduction, use or disclosure to third parties without express authority is strictly forbidden. © Copyright ABB

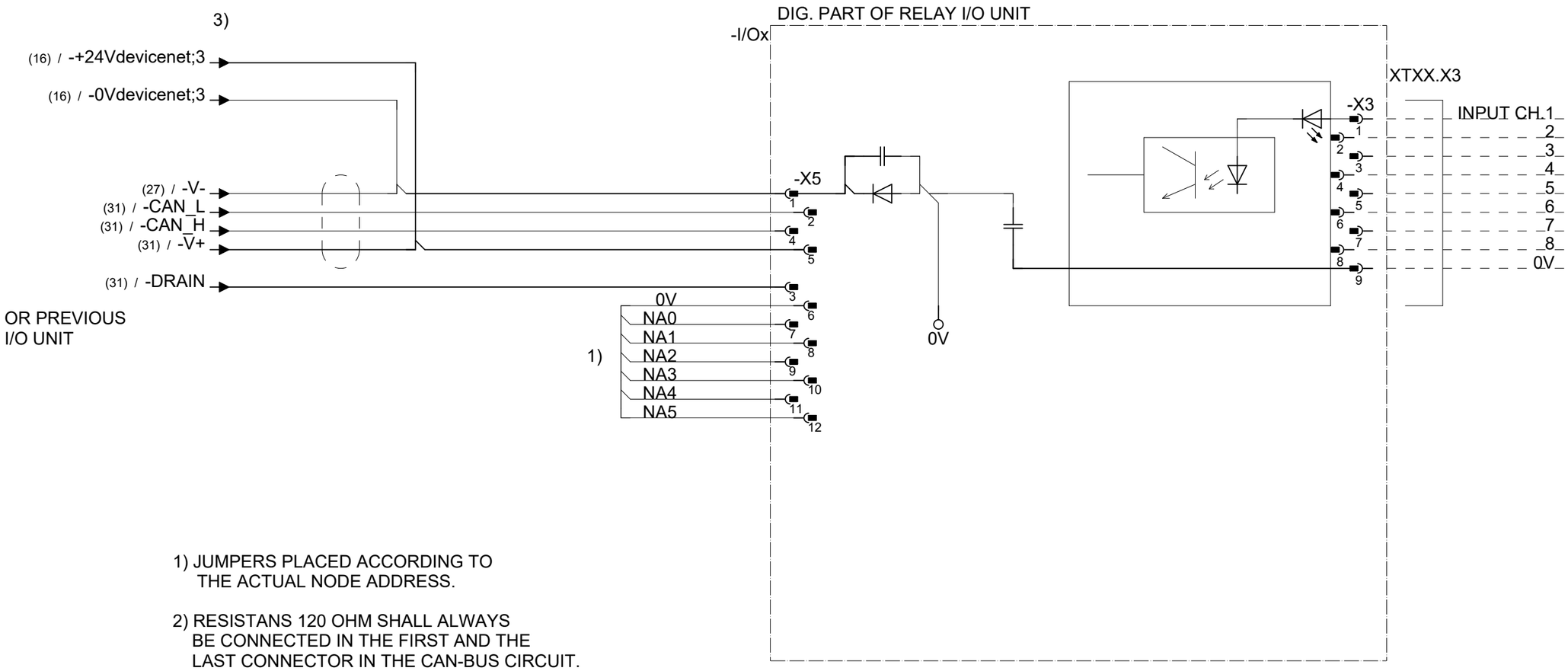

1) JUMPERS PLACED ACCORDING TO THE ACTUAL NODE ADDRESS.

2) RESISTANS 120 OHM SHALL ALWAYS BE CONNECTED IN THE FIRST AND THE LAST CONNECTOR IN THE CAN-BUS CIRCUIT.

3) CONNECTED IN THE LAST CONNECTOR IN THE CAN-BUS CIRCUIT.

We reserve all rights in this document and in the information contained therein. Reproduction, use or disclosure to third parties without express authority is strictly forbidden. © Copyright ABB

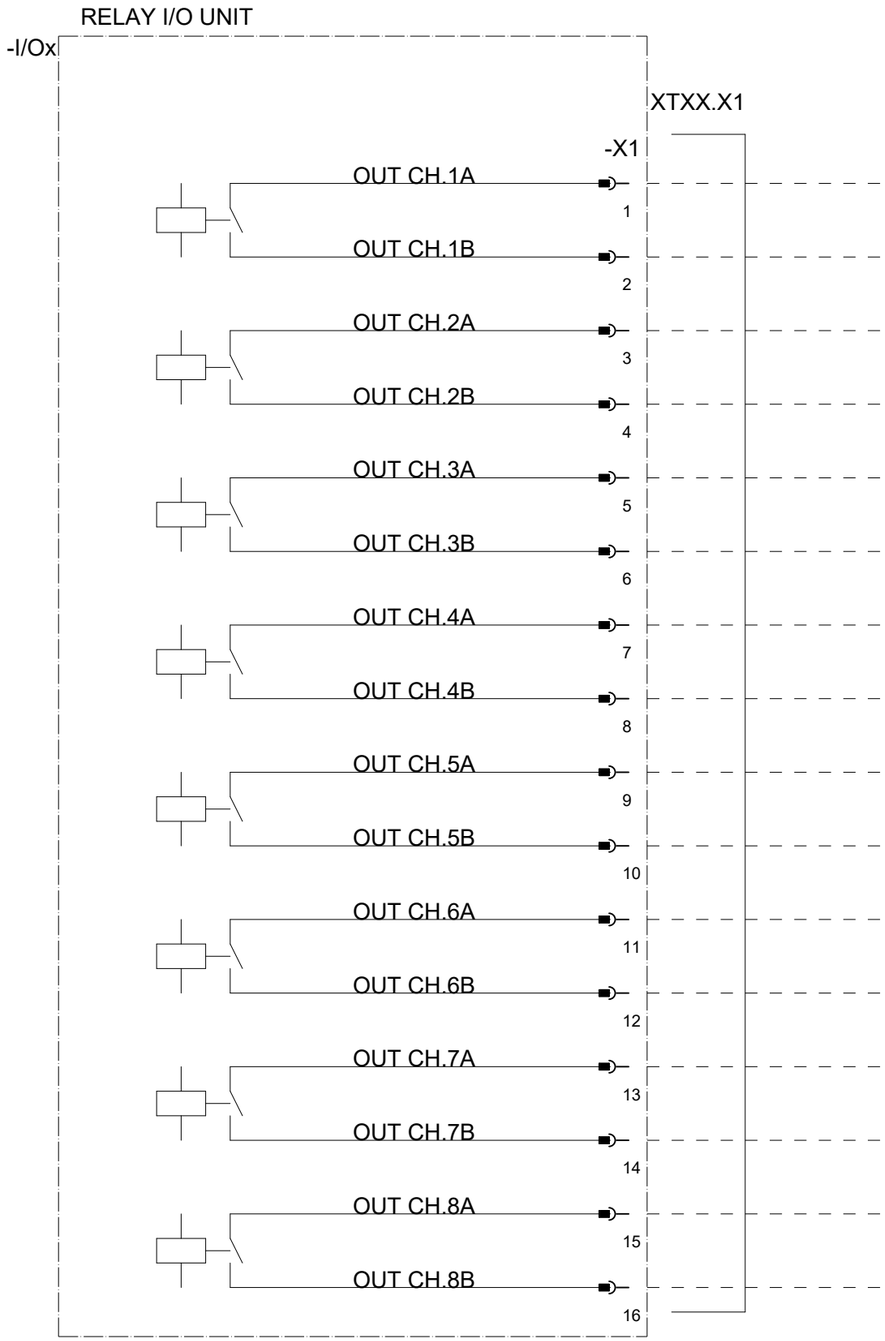

Latest revision:		Lab/Office: RA/RDP	PMC DESIGN 15 Rel: 24B RELAY I/O UNIT	Status: Approved	Plant: = Location: + Sublocation: +
Prepared by, date: A Hägglund	Approved by, date: S Hällgren 2024-03-15			Document no. 3HAC026871-020	Rev. Ind 15

We reserve all rights in this document and in the information contained therein. Reproduction, use or disclosure to third parties without express authority is strictly forbidden. © Copyright ABB

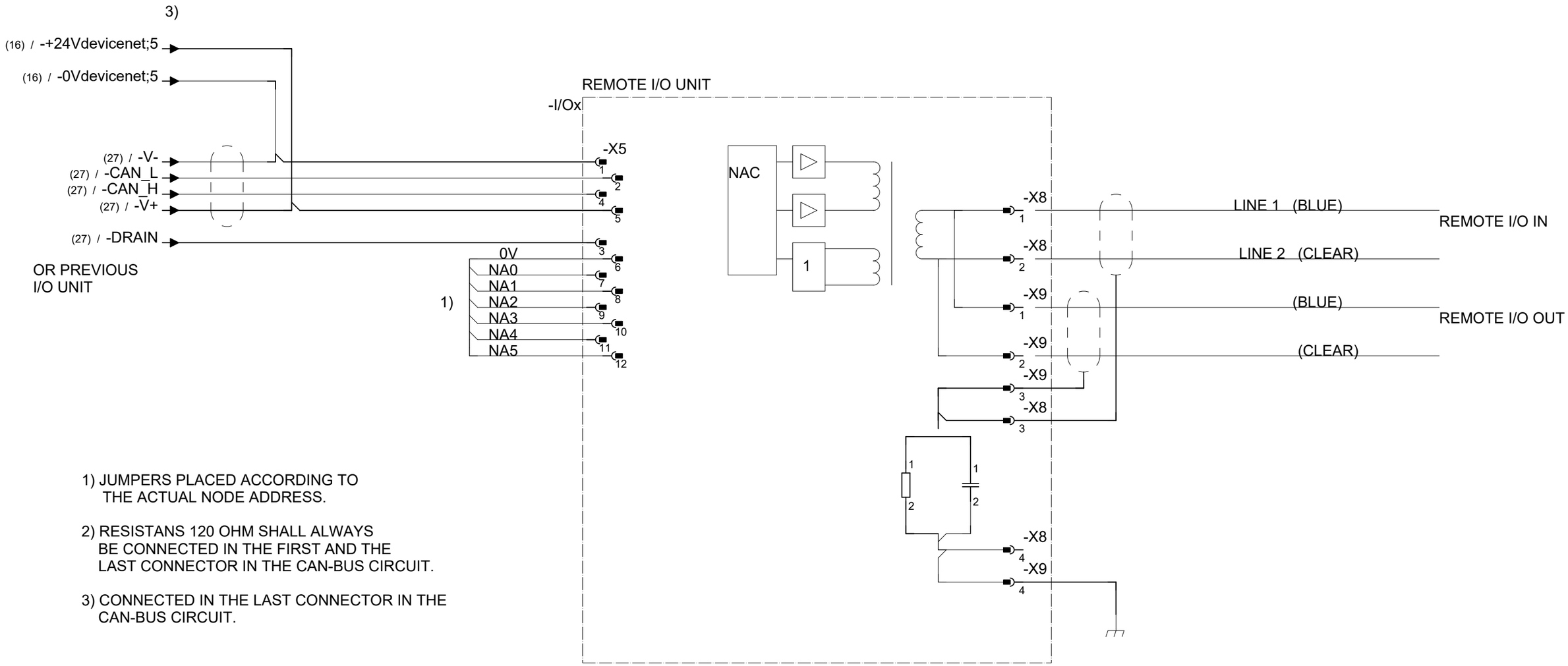

1) JUMPERS PLACED ACCORDING TO THE ACTUAL NODE ADDRESS.

2) RESISTANS 120 OHM SHALL ALWAYS BE CONNECTED IN THE FIRST AND THE LAST CONNECTOR IN THE CAN-BUS CIRCUIT.

3) CONNECTED IN THE LAST CONNECTOR IN THE CAN-BUS CIRCUIT.

Latest revision:		Lab/Office: RA/RDP	PMC DESIGN 15 Rel: 24B REMOTE I/O UNIT	Status: Approved	Plant: = Location: + Sublocation: +
Prepared by, date: A Hägglund	Approved by, date: S Hällgren 2024-03-15			Document no. 3HAC026871-020	Rev. Ind 15

We reserve all rights in this document and in the information contained therein. Reproduction, use or disclosure to third parties without express authority is strictly forbidden. © Copyright ABB

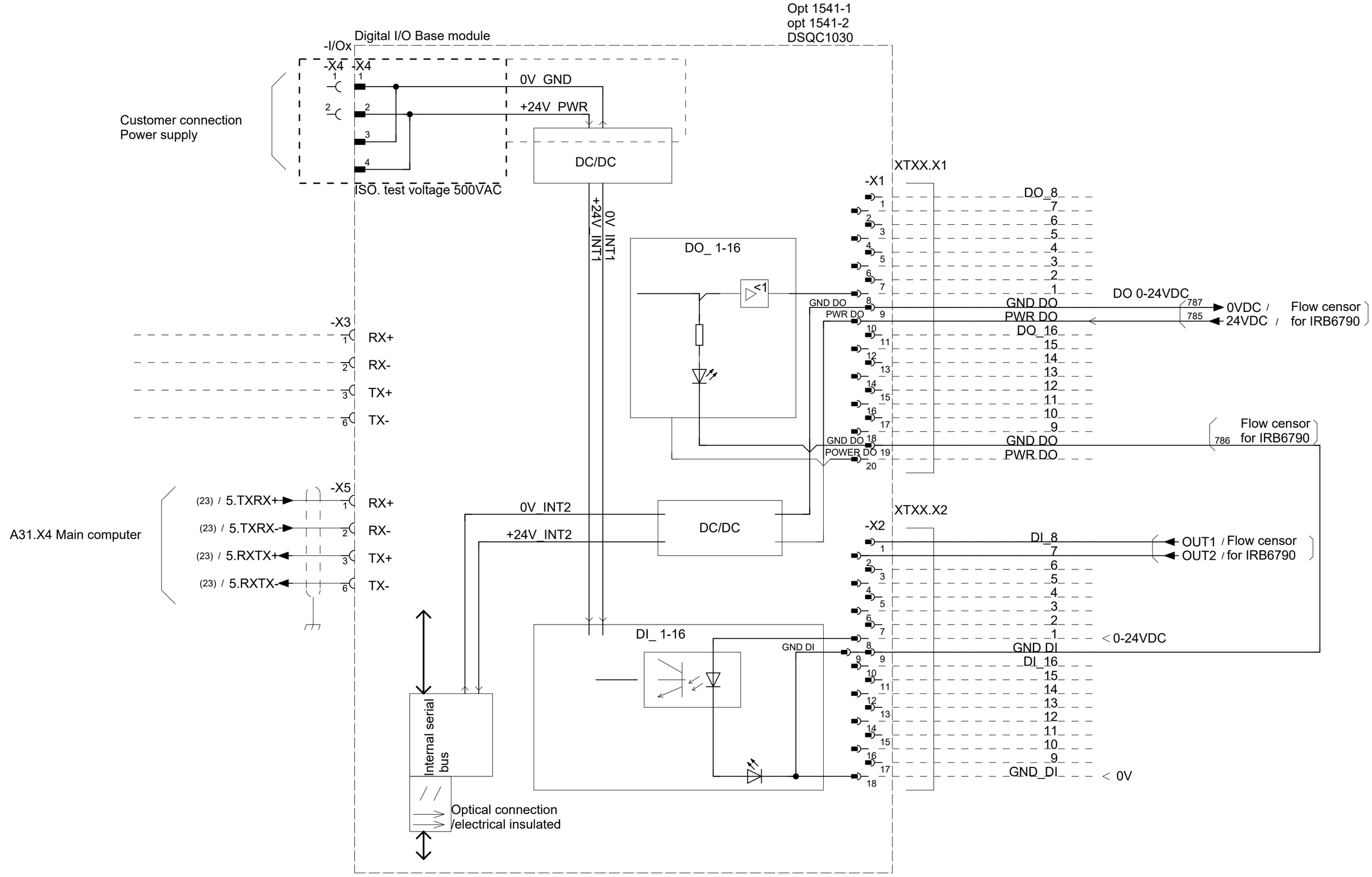

Latest revision:		Lab/Office: RA/RDP	PMC DESIGN 15 Rel: 24B Local I/O Digital Base 16in/16out	Status: Approved	Plant: = Location: + Sublocation: +
				Document no. 3HAC026871-020	Rev. Ind 15
					Page 34.2 Next 34.4 Total 125
Prepared by, date: A Hägglund	Approved by, date: S Hällgren 2024-03-15				

We reserve all rights in this document and in the information contained therein. Reproduction, use or disclosure to third parties without express authority is strictly forbidden. © Copyright ABB

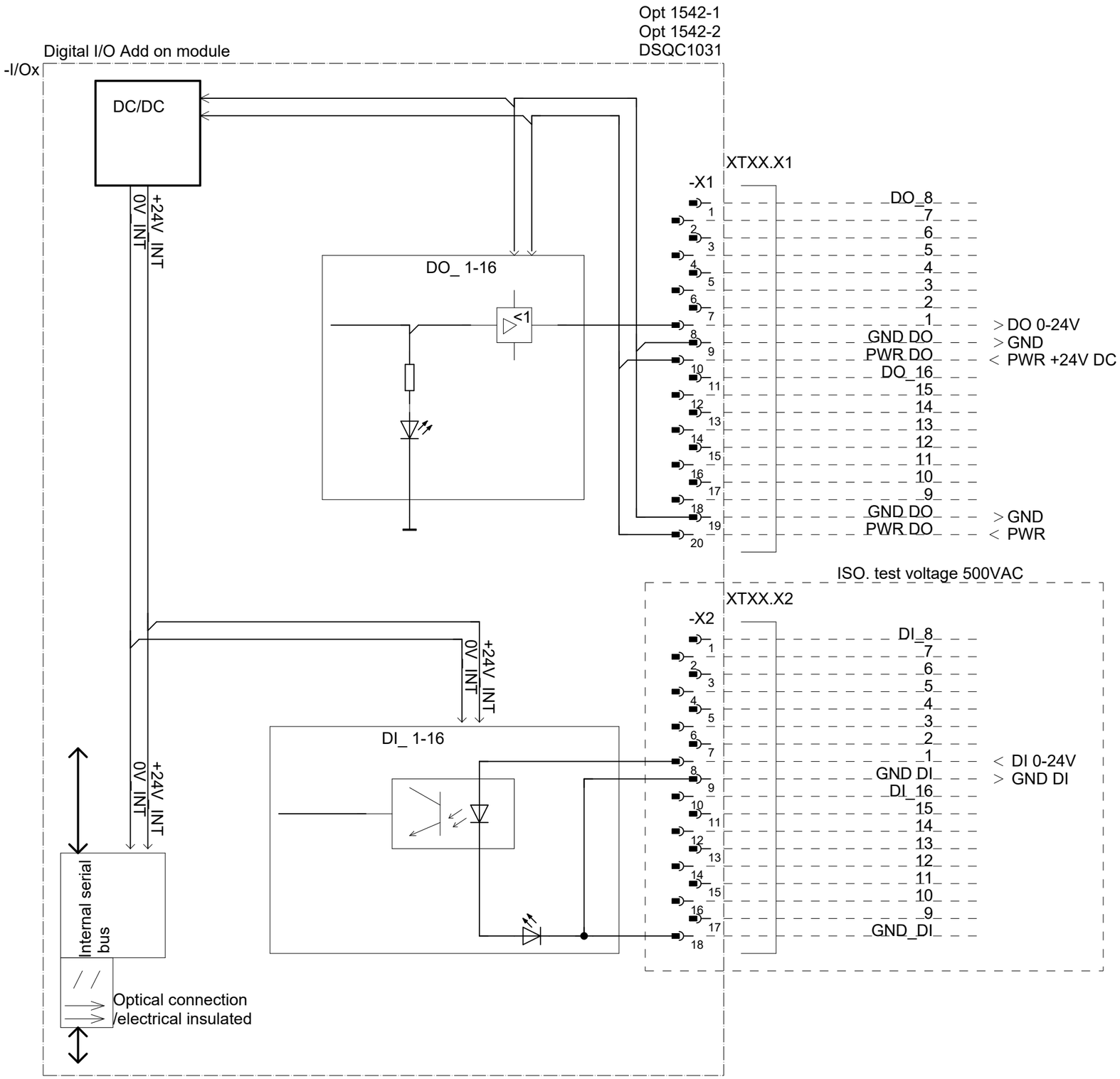

Latest revision:		Lab/Office: RA/RDP	PMC DESIGN 15 Rel: 24B Local I/O Digital add on 16in/16out	Status: Approved	Plant: = Location: + Sublocation: +
Prepared by, date: A Hägglund	Approved by, date: S Hällgren 2024-03-15			Document no. 3HAC026871-020	Rev. Ind 15
					Page 34.4 Next 34.6 Total 125

We reserve all rights in this document and in the information contained therein. Reproduction, use or disclosure to third parties without express authority is strictly forbidden. © Copyright ABB

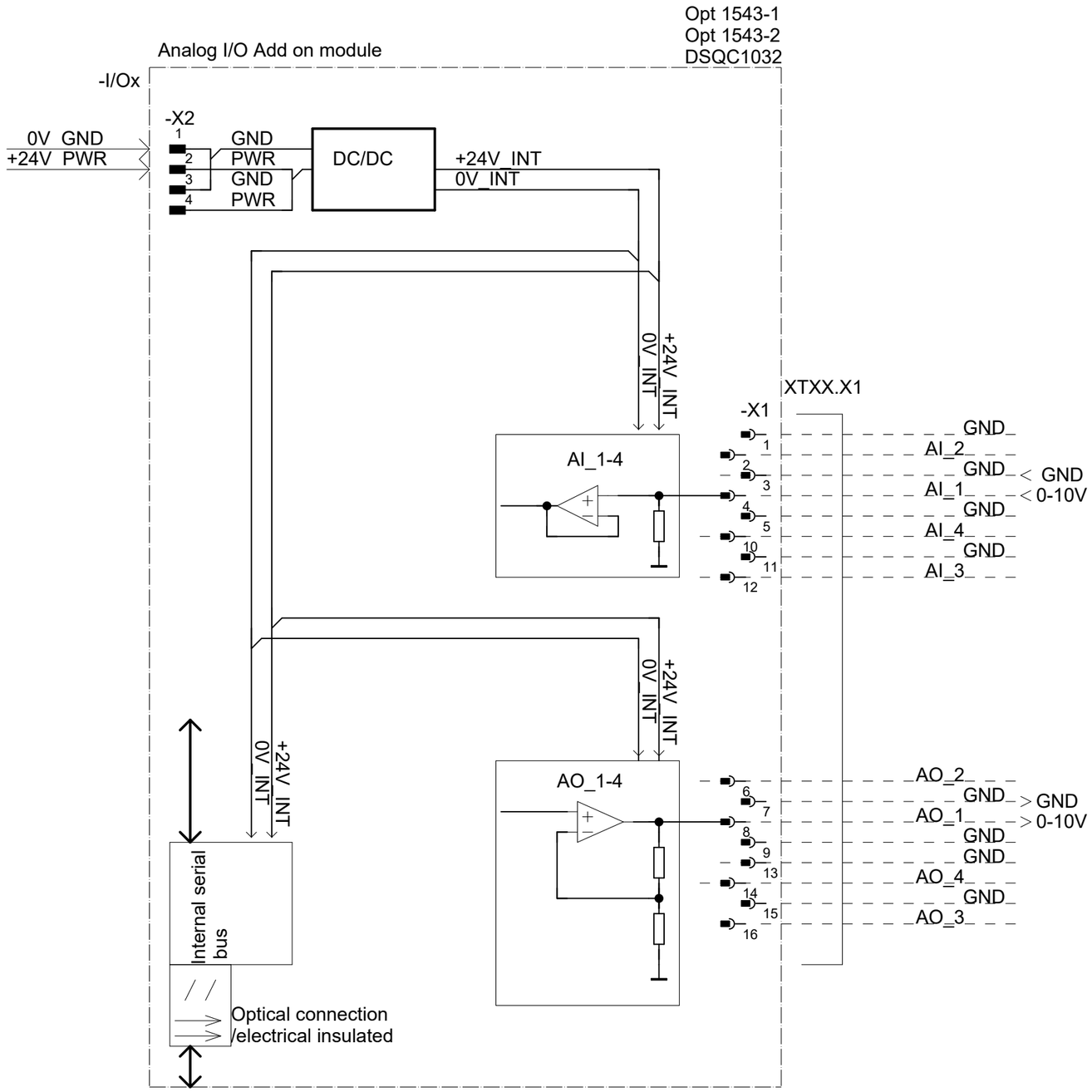

Latest revision:		Lab/Office: RA/RDP	PMC DESIGN 15 Rel: 24B Local I/O Analog add on 4in/4out	Status: Approved	Plant: = Location: + Sublocation: +
Prepared by, date: A Hägglund	Approved by, date: S Hällgren 2024-03-15			Document no. 3HAC026871-020	Rev. Ind 15

We reserve all rights in this document and in the information contained therein. Reproduction, use or disclosure to third parties without express authority is strictly forbidden. © Copyright ABB

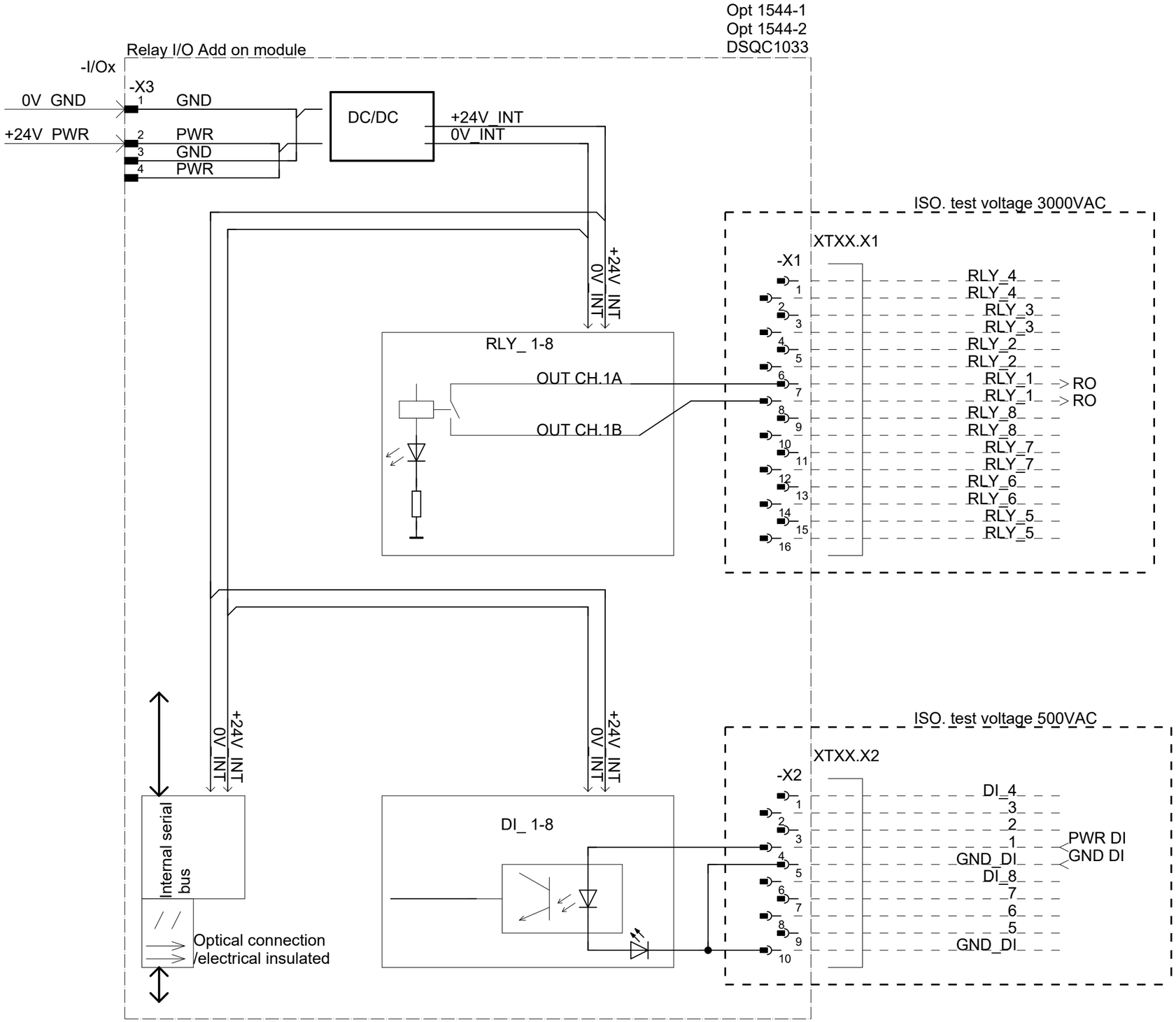

Latest revision:		Lab/Office: RA/RDP	PMC DESIGN 15 Rel: 24B Local I/O Relay add on 8RO/8DI	Status: Approved	Plant: = Location: + Sublocation: +
Prepared by, date: A Hägglund	Approved by, date: S Hällgren 2024-03-15			Document no. 3HAC026871-020	Rev. Ind 15

We reserve all rights in this document and in the information contained therein. Reproduction, use or disclosure to third parties without express authority is strictly forbidden. © Copyright ABB

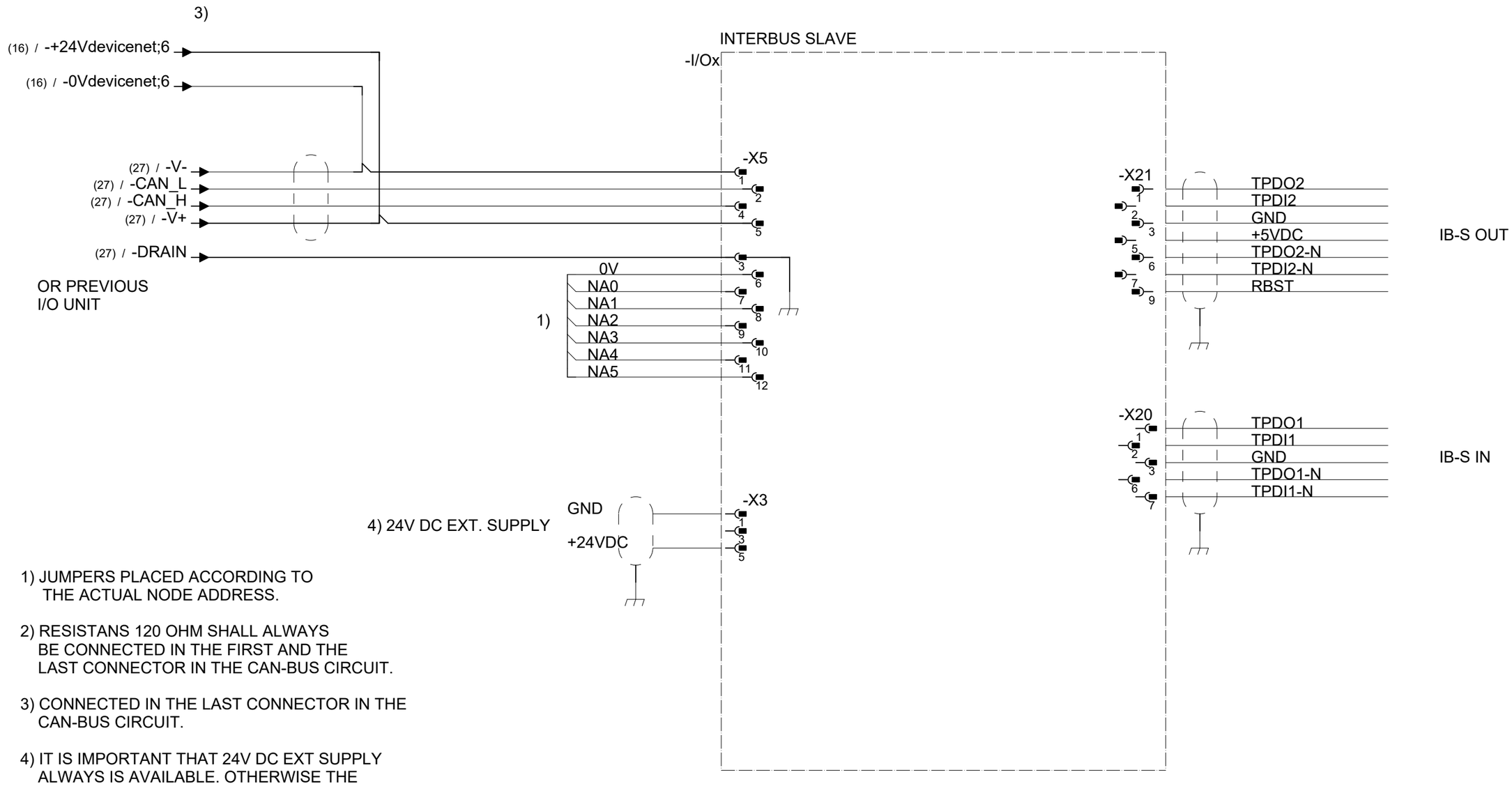

1) JUMPERS PLACED ACCORDING TO THE ACTUAL NODE ADDRESS.

2) RESISTANS 120 OHM SHALL ALWAYS BE CONNECTED IN THE FIRST AND THE LAST CONNECTOR IN THE CAN-BUS CIRCUIT.

3) CONNECTED IN THE LAST CONNECTOR IN THE CAN-BUS CIRCUIT.

4) IT IS IMPORTANT THAT 24V DC EXT SUPPLY ALWAYS IS AVAILABLE. OTHERWISE THE INTERBUS CAN NOT WORK IF THE CONTROLLER IS TURNED OFF.

We reserve all rights in this document and in the information contained therein. Reproduction, use or disclosure to third parties without express authority is strictly forbidden. © Copyright ABB

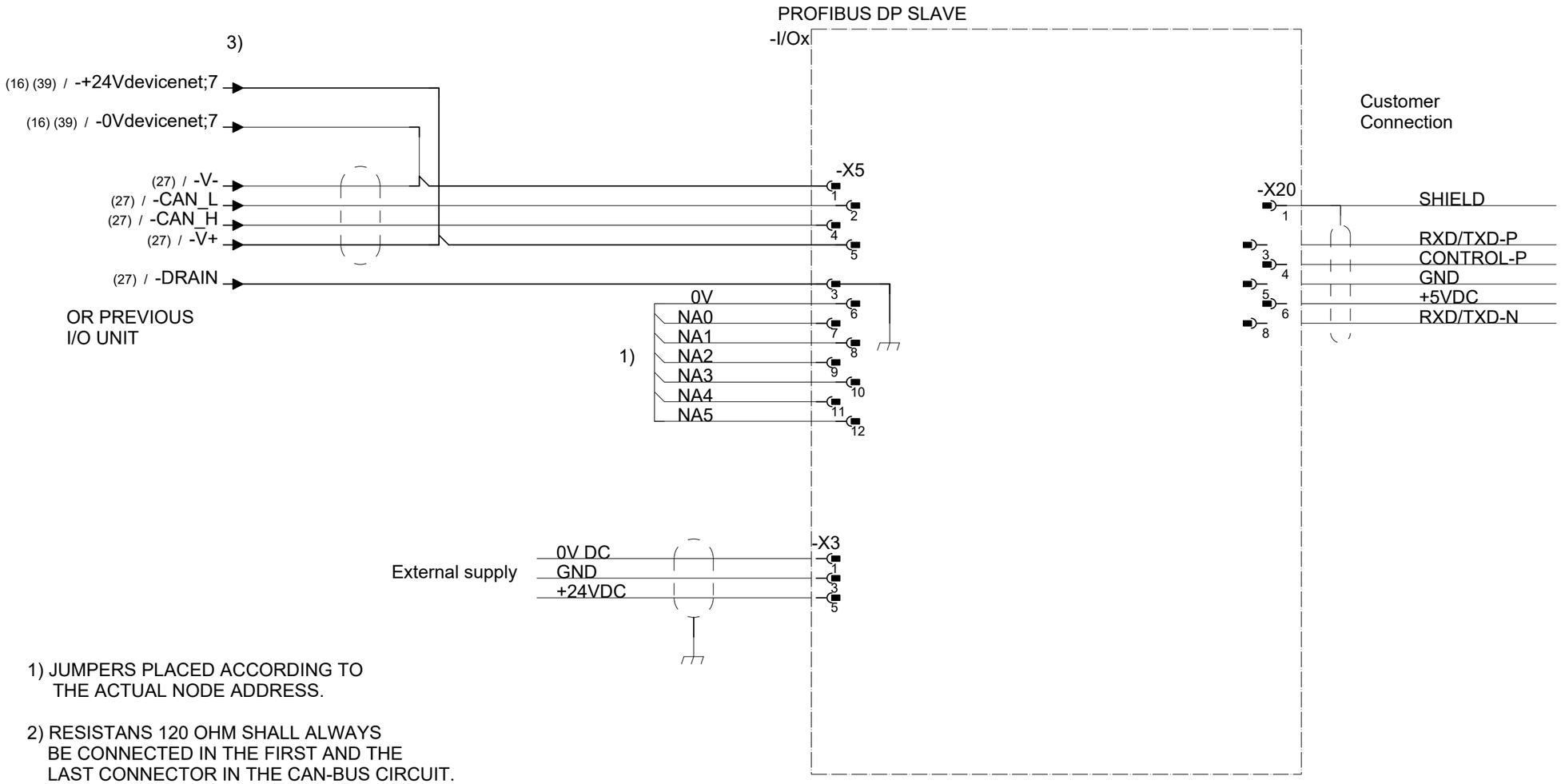

1) JUMPERS PLACED ACCORDING TO
THE ACTUAL NODE ADDRESS.

2) RESISTANS 120 OHM SHALL ALWAYS
BE CONNECTED IN THE FIRST AND THE
LAST CONNECTOR IN THE CAN-BUS CIRCUIT.

3) CONNECTED IN THE LAST CONNECTOR IN THE
CAN-BUS CIRCUIT.

Latest revision:		Lab/Office: RA/RDP	PMC DESIGN 15 Rel: 24B PROFIBUS DP SLAVE	Status: Approved	Plant: = Location: + Sublocation: +
Prepared by, date: A Hägglund	Approved by, date: S Hällgren 2024-03-15			Document no. 3HAC026871-020	Rev. Ind 15

We reserve all rights in this document and in the information contained therein. Reproduction, use or disclosure to third parties without express authority is strictly forbidden. © Copyright ABB

Opt. if 941-1

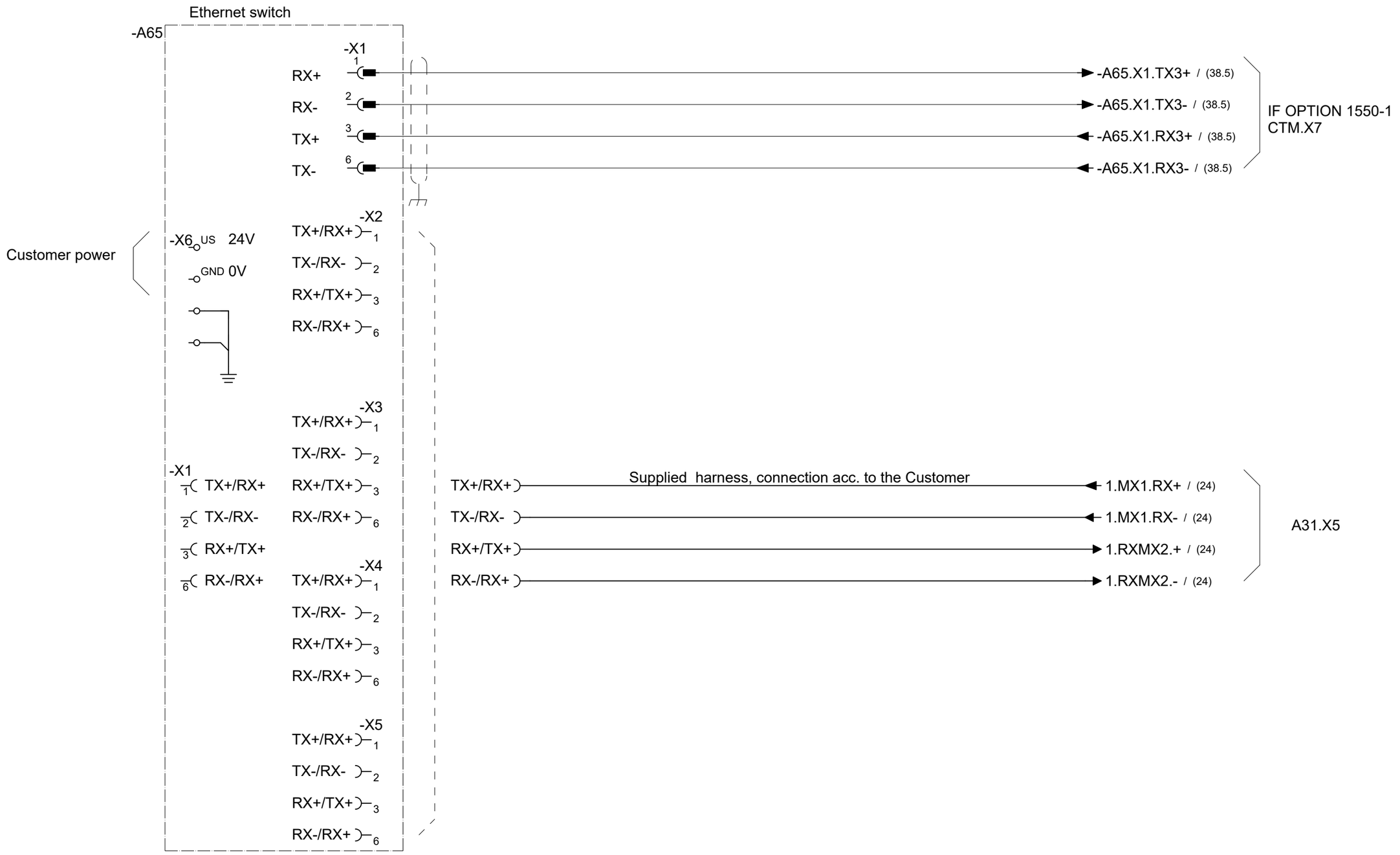

Latest revision:		ABB	Lab/Office: RA/RDP	PMC DESIGN 15 Rel: 24B ETHERNET SWITCH	Status: Approved	Plant: = Location: + Sublocation: +
Prepared by, date: A Hägglund	Approved by, date: S Hällgren 2024-03-15				Document no. 3HAC026871-020	Rev. Ind 15

We reserve all rights in this document and in the information contained therein. Reproduction, use or disclosure to third parties without express authority is strictly forbidden. © Copyright ABB

PROCESS POWER SUPPLY G2

A42.X2

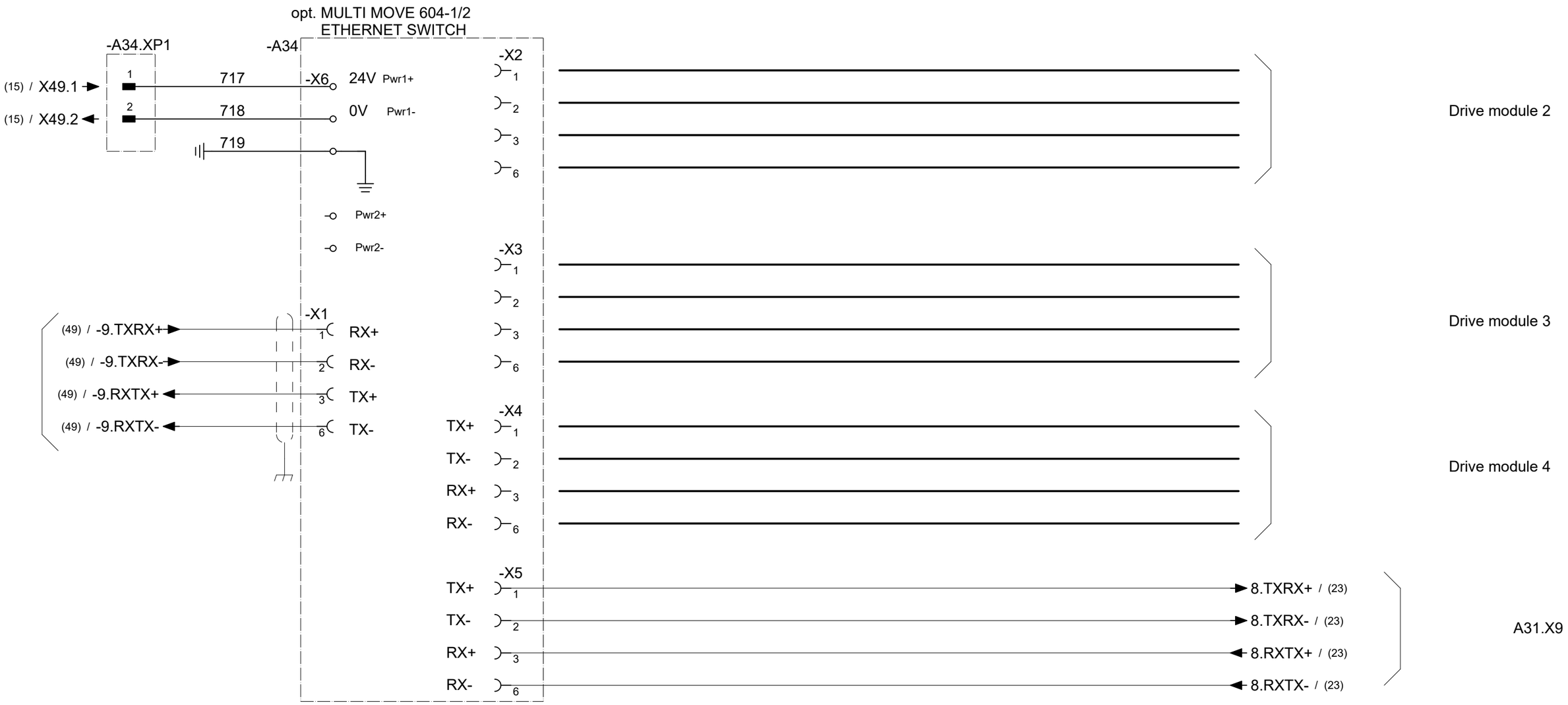

Latest revision:		ABB	Lab/Office: RA/RDP	PMC DESIGN 15 Rel: 24B ETHERNET SWITCH A34, option MULTI MOVE 604-1/2	Status: Approved	Plant: = Location: + Sublocation: +
Prepared by, date: A Hägglund	Approved by, date: S Hällgren 2024-03-15				Document no. 3HAC026871-020	Rev. Ind 15
						Page 37.1 Next 37.2 Total 125

We reserve all rights in this document and in the information contained therein. Reproduction, use or disclosure to third parties without express authority is strictly forbidden. © Copyright ABB

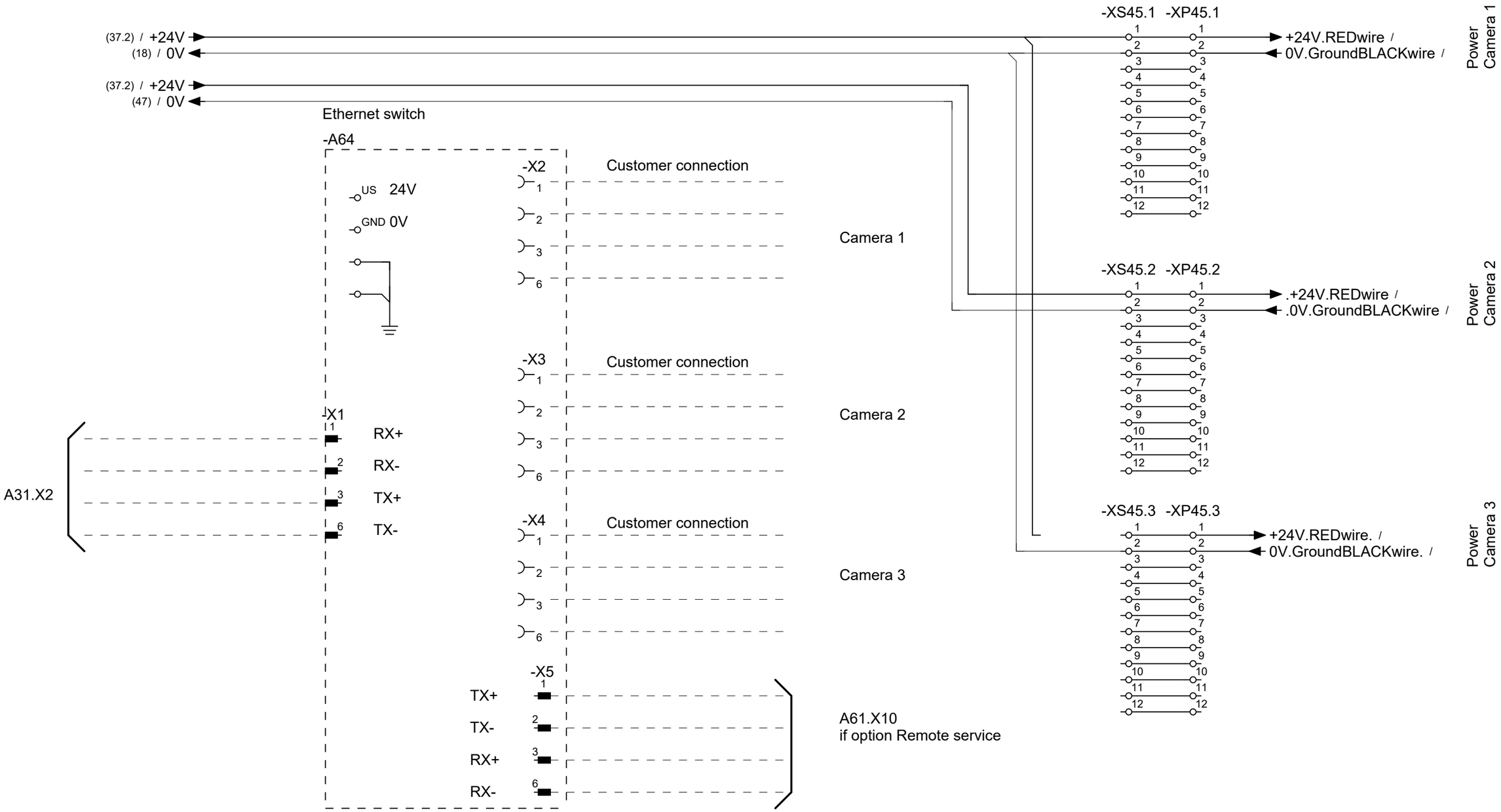

Latest revision:		Lab/Office: RA/RDP	PMC DESIGN 15 Rel: 24B ETHERNET SWITCH A64/CAMERA	Status: Approved	Plant: = Location: + Sublocation: +
Prepared by, date: A Hägglund	Approved by, date: S Hällgren 2024-03-15			Document no. 3HAC026871-020	Rev. Ind 15
					Page 37.2 Next 37.3 Total 125

We reserve all rights in this document and in the information contained therein. Reproduction, use or disclosure to third parties without express authority is strictly forbidden. © Copyright ABB

Robot controller

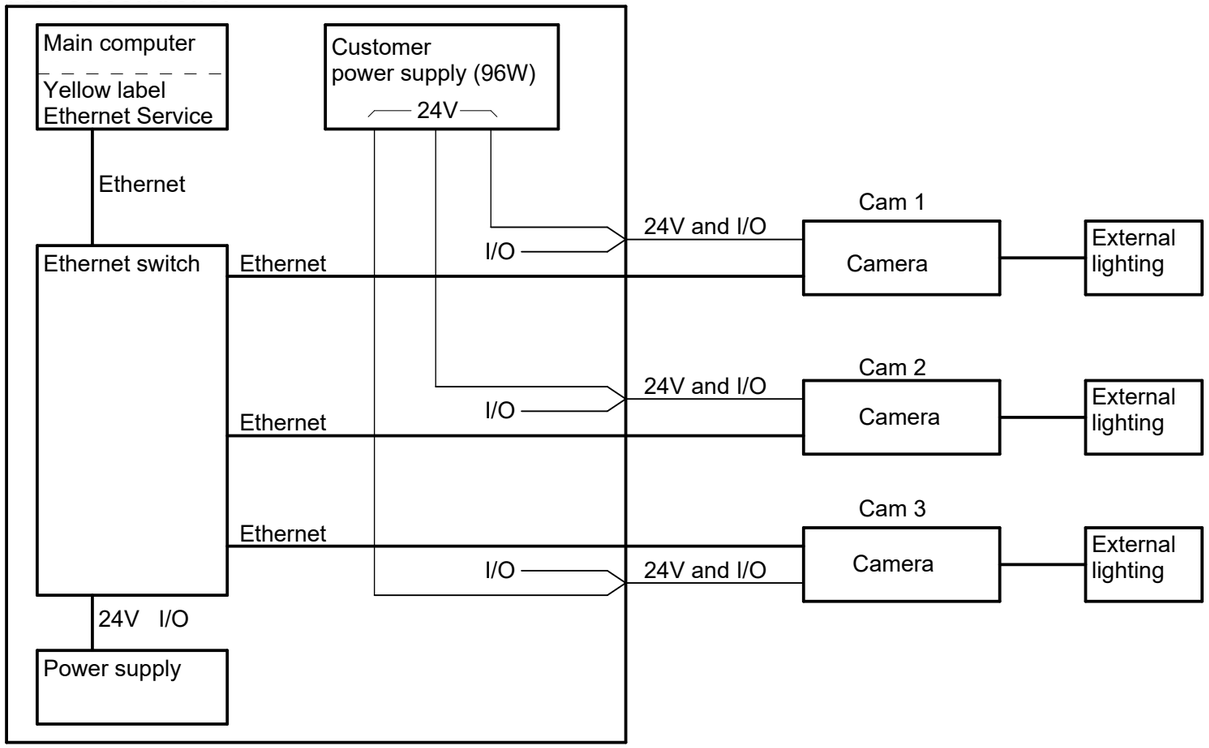

Robot controller with Conveyor Tracking. Opt.1551-1

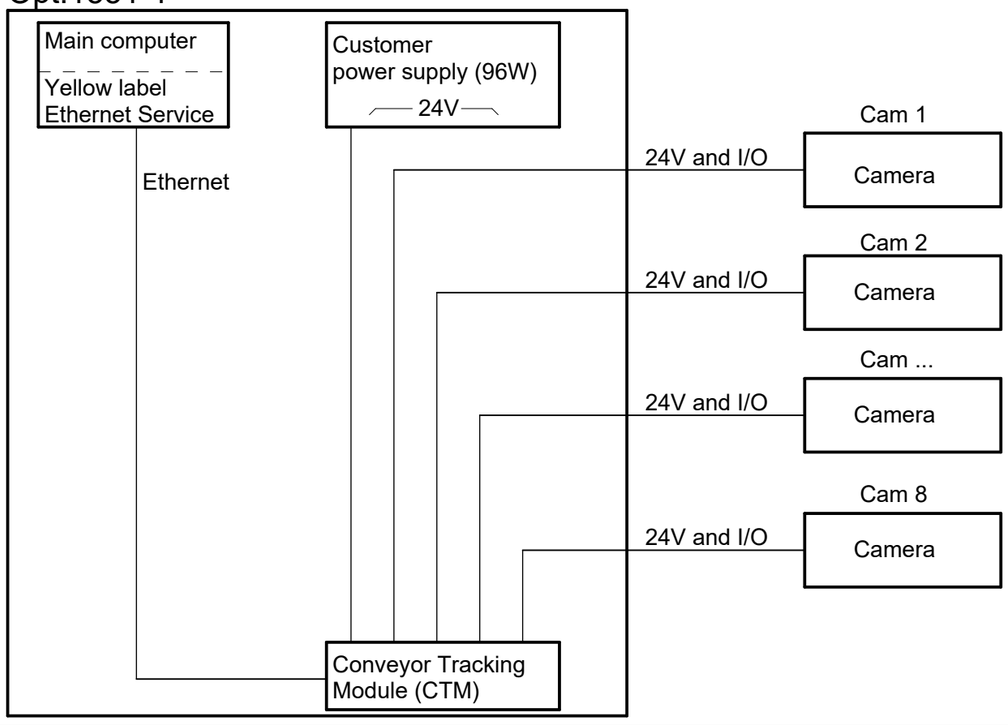

We reserve all rights in this document and in the information contained therein. Reproduction, use or disclosure to third parties without express authority is strictly forbidden. © Copyright ABB

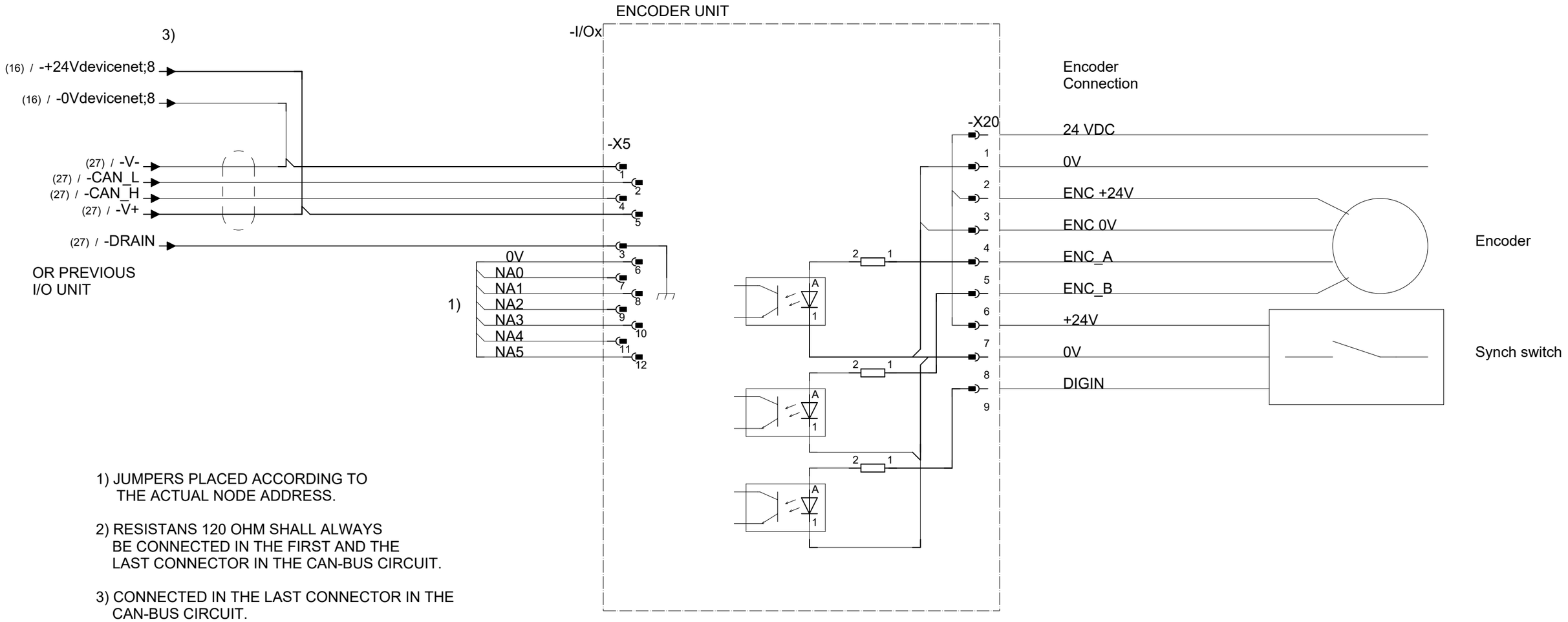

1) JUMPERS PLACED ACCORDING TO THE ACTUAL NODE ADDRESS.

2) RESISTANS 120 OHM SHALL ALWAYS BE CONNECTED IN THE FIRST AND THE LAST CONNECTOR IN THE CAN-BUS CIRCUIT.

3) CONNECTED IN THE LAST CONNECTOR IN THE CAN-BUS CIRCUIT.

Latest revision:		Lab/Office: RA/RDP	PMC DESIGN 15 Rel: 24B ENCODER UNIT	Status: Approved	Plant: = Location: + Sublocation: +
Prepared by, date: A Hägglund	Approved by, date: S Hällgren 2024-03-15			Document no. 3HAC026871-020	Rev. Ind 15

We reserve all rights in this document and in the information contained therein. Reproduction, use or disclosure to third parties without express authority is strictly forbidden. © Copyright ABB

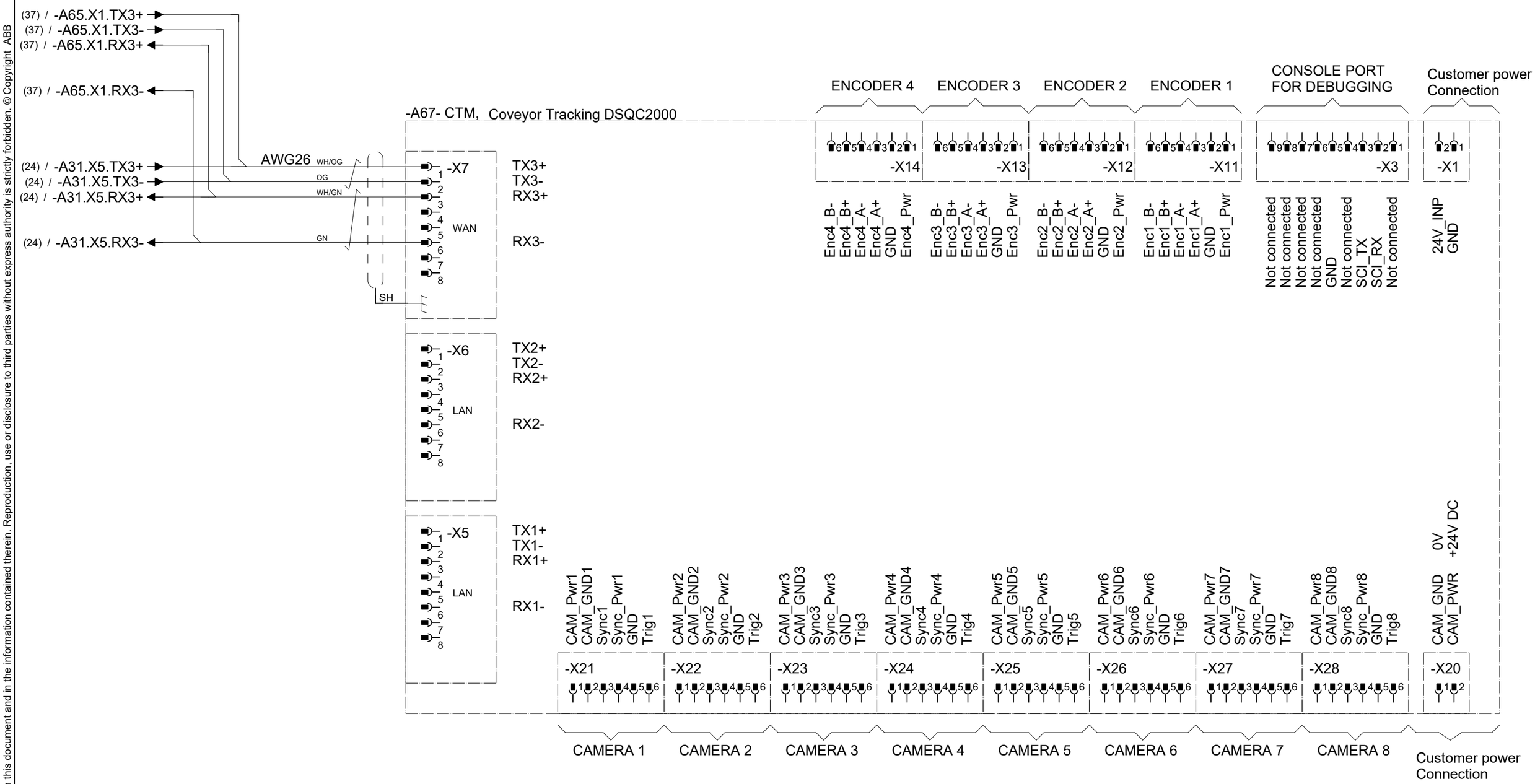

OPTION 1550-1

Latest revision:		Lab/Office: RA/RDP	PMC DESIGN 15 Rel: 24B CONVEYOR TRACKING MODULE, DSQC 2000	Status: Approved	Plant: = Location: + Sublocation: +
Prepared by, date: A Hägglund	Approved by, date: S Hällgren 2024-03-15			Document no. 3HAC026871-020	Rev. Ind 15

We reserve all rights in this document and in the information contained therein. Reproduction, use or disclosure to third parties without express authority is strictly forbidden. © Copyright ABB

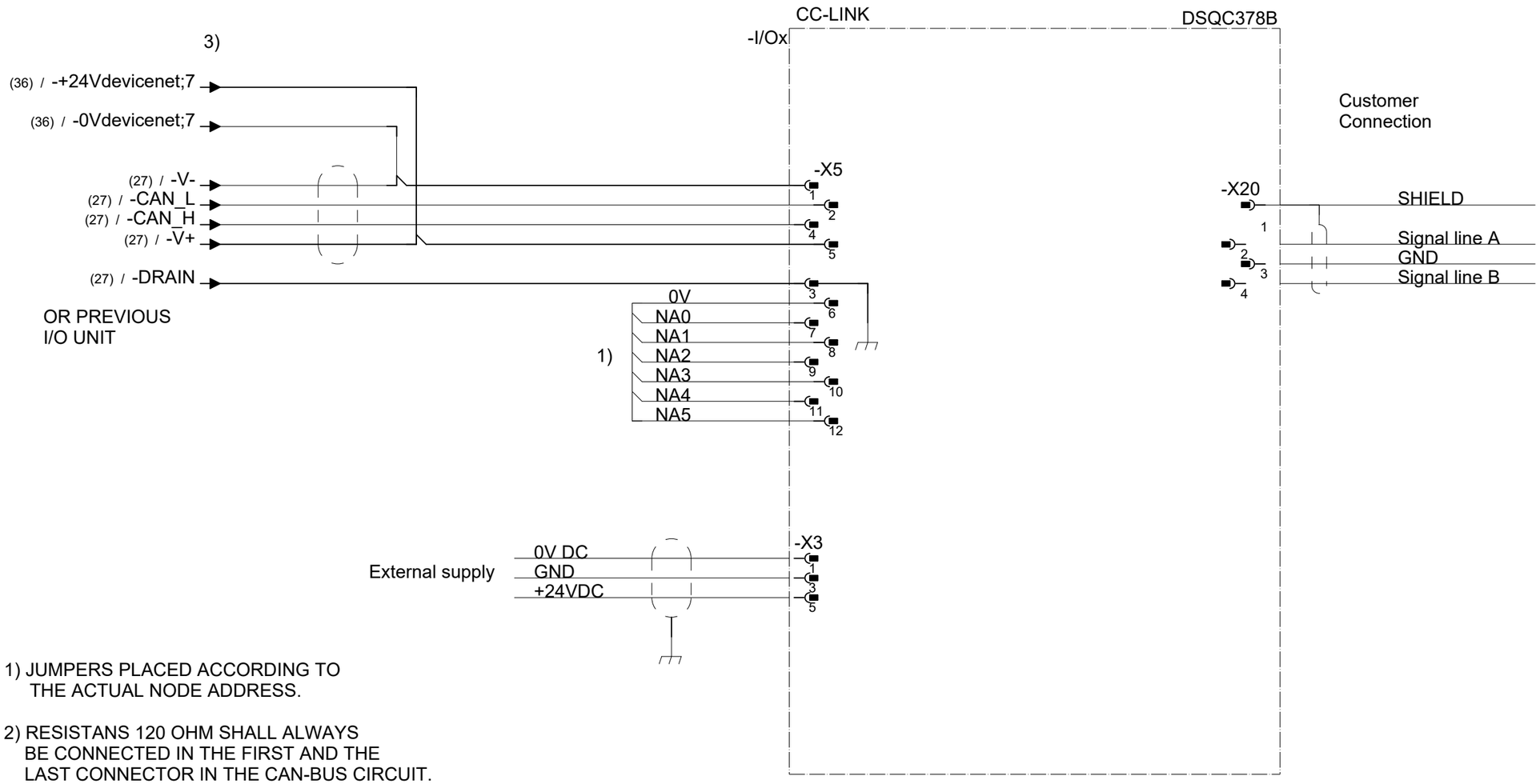

1) JUMPERS PLACED ACCORDING TO
THE ACTUAL NODE ADDRESS.

2) RESISTANS 120 OHM SHALL ALWAYS
BE CONNECTED IN THE FIRST AND THE
LAST CONNECTOR IN THE CAN-BUS CIRCUIT.

3) CONNECTED IN THE LAST CONNECTOR IN THE
CAN-BUS CIRCUIT.

Latest revision:		Lab/Office: RA/RDP	PMC DESIGN 15 Rel: 24B CC-LINK	Status: Approved	Plant: = Location: + Sublocation: +	
				Document no. 3HAC026871-020	Rev. Ind 15	Page 39 Next 40 Total 125
Prepared by, date: A Hägglund	Approved by, date: S Hällgren 2024-03-15					

We reserve all rights in this document and in the information contained therein. Reproduction, use or disclosure to third parties without express authority is strictly forbidden. © Copyright ABB

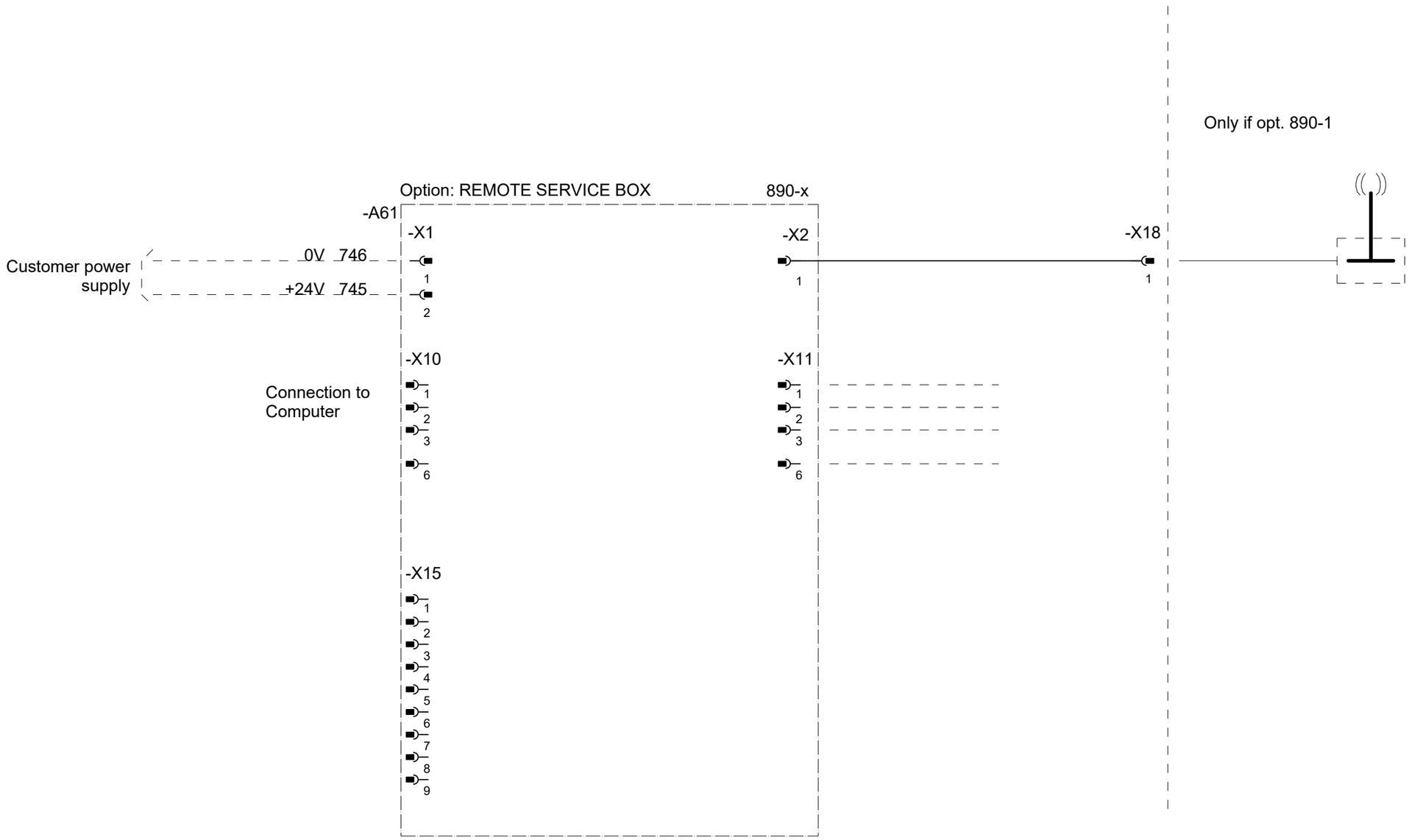

Latest revision:		ABB	Lab/Office: RA/RDP	PMC DESIGN 15 Rel: 24B REMOTE SERVICE BOX for Rel. 16.1 and earlier	Status: Approved	Plant: = Location: + Sublocation: +
Prepared by, date: A Hägglund	Approved by, date: S Hällgren 2024-03-15				Document no. 3HAC026871-020	Rev. Ind 15

We reserve all rights in this document and in the information contained therein. Reproduction, use or disclosure to third parties without express authority is strictly forbidden. © Copyright ABB

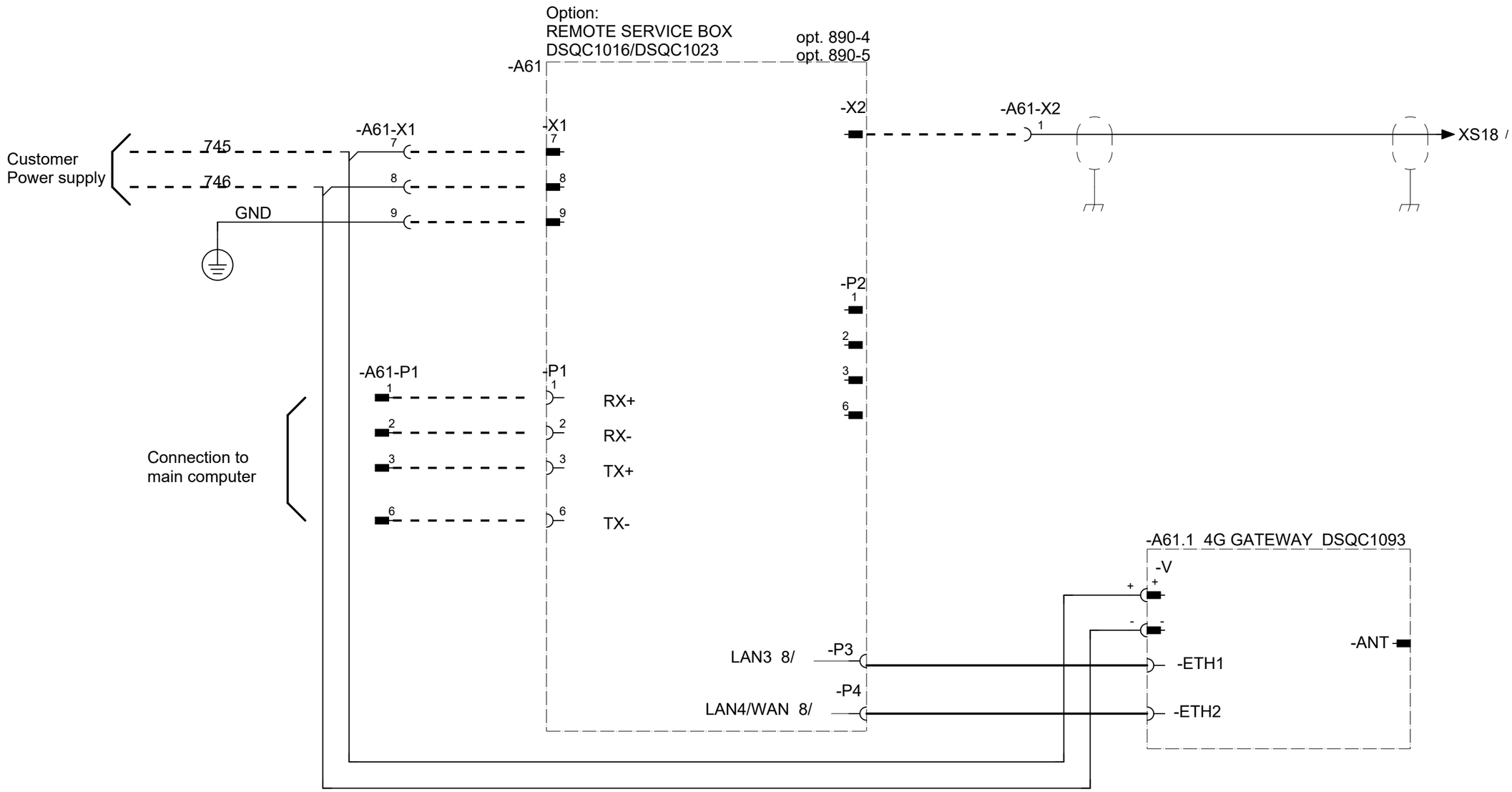

Latest revision:		Lab/Office: RA/RDP	PMC DESIGN 15 Rel: 24B REMOTE SERVICE BOX DSQC1016/DSQC1023 from Rel. 16.2	Status: Approved	Plant: = Location: + Sublocation: +
Prepared by, date: A Hägglund	Approved by, date: S Hällgren 2024-03-15			Document no. 3HAC026871-020	Rev. Ind 15

We reserve all rights in this document and in the information contained therein. Reproduction, use or disclosure to third parties without express authority is strictly forbidden. © Copyright ABB

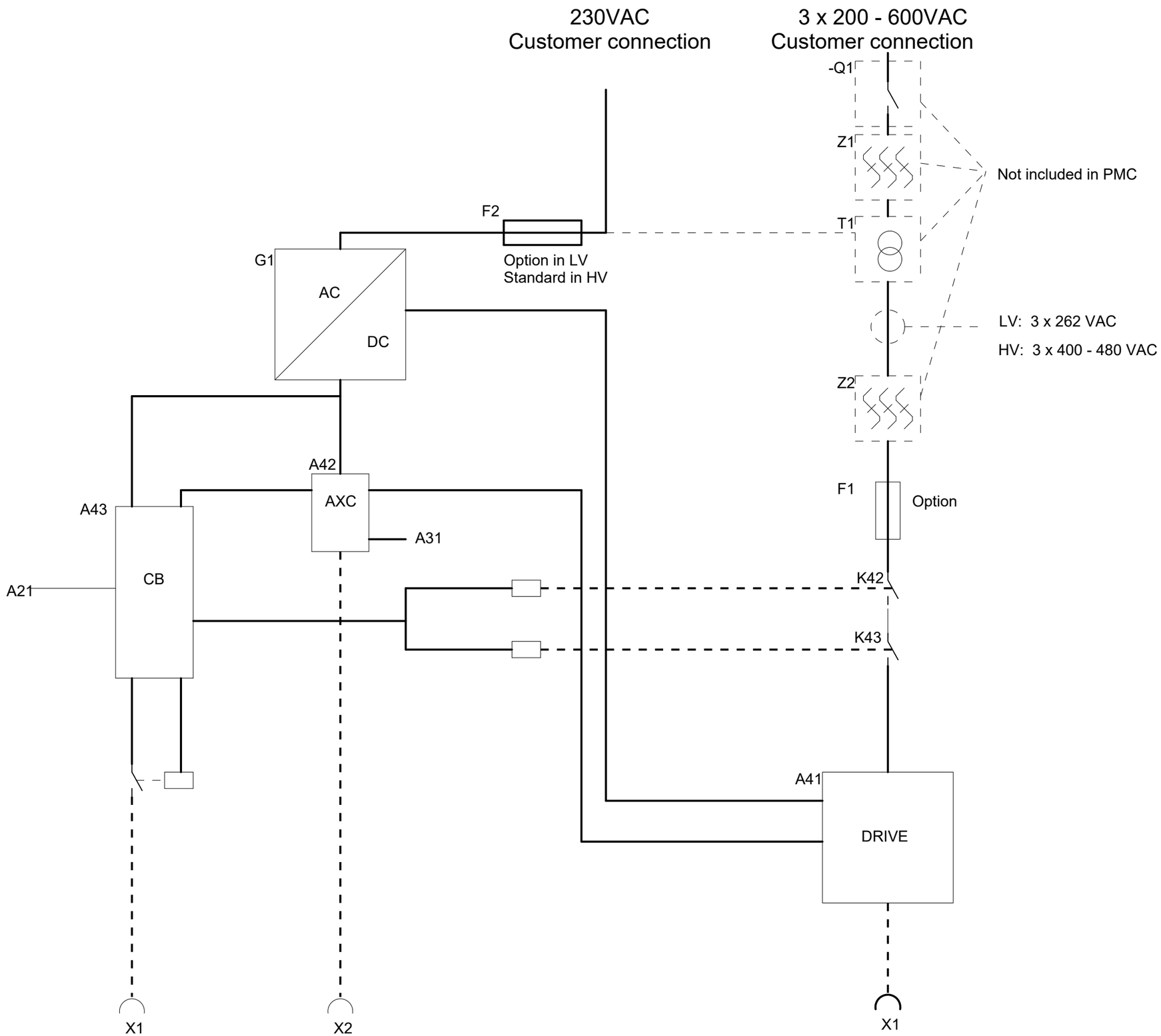

Latest revision:		ABB	Lab/Office: RA/RDP	PMC DESIGN 15 Rel: 24B BLOCK DIAGRAM DRIVE UNIT	Status: Approved	Plant: = Location: + Sublocation: +
Prepared by, date: A Hägglund	Approved by, date: S Hällgren 2024-03-15				Document no. 3HAC026871-020	Rev. Ind 15

We reserve all rights in this document and in the information contained therein. Reproduction, use or disclosure to third parties without express authority is strictly forbidden. © Copyright ABB

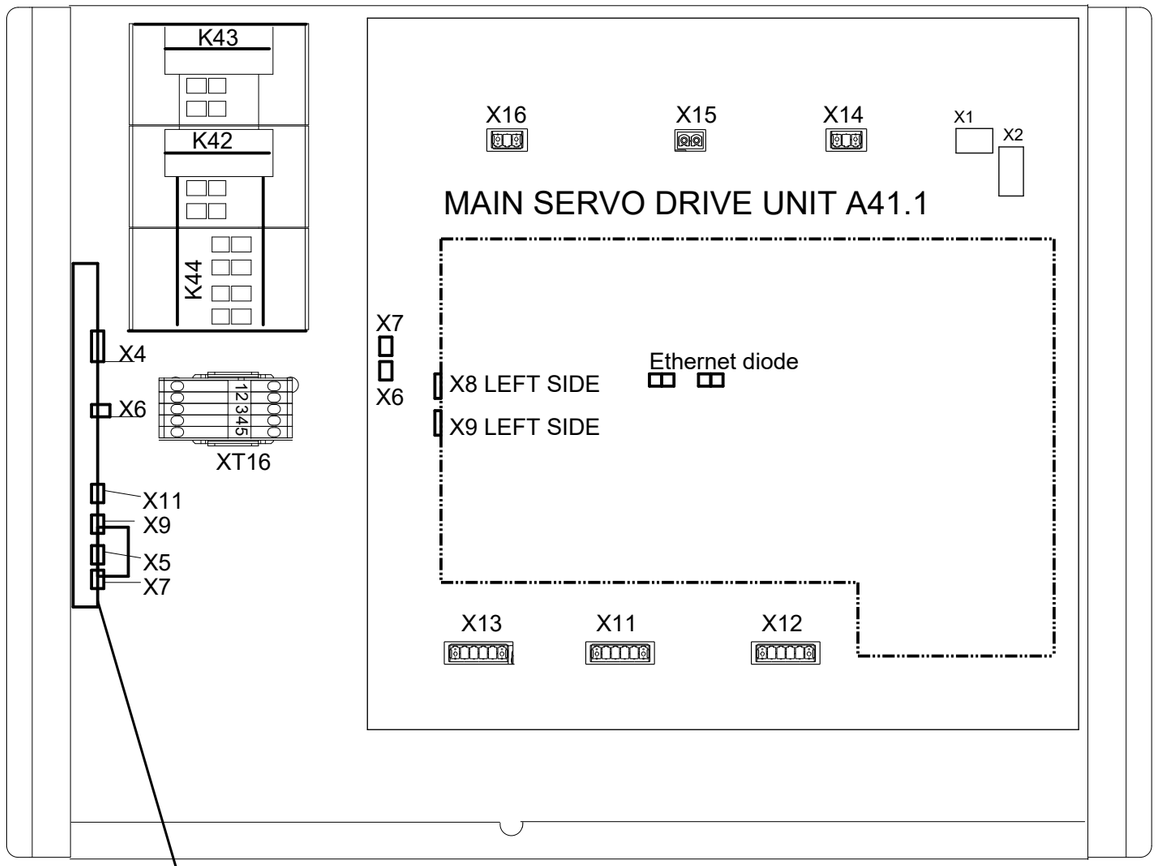

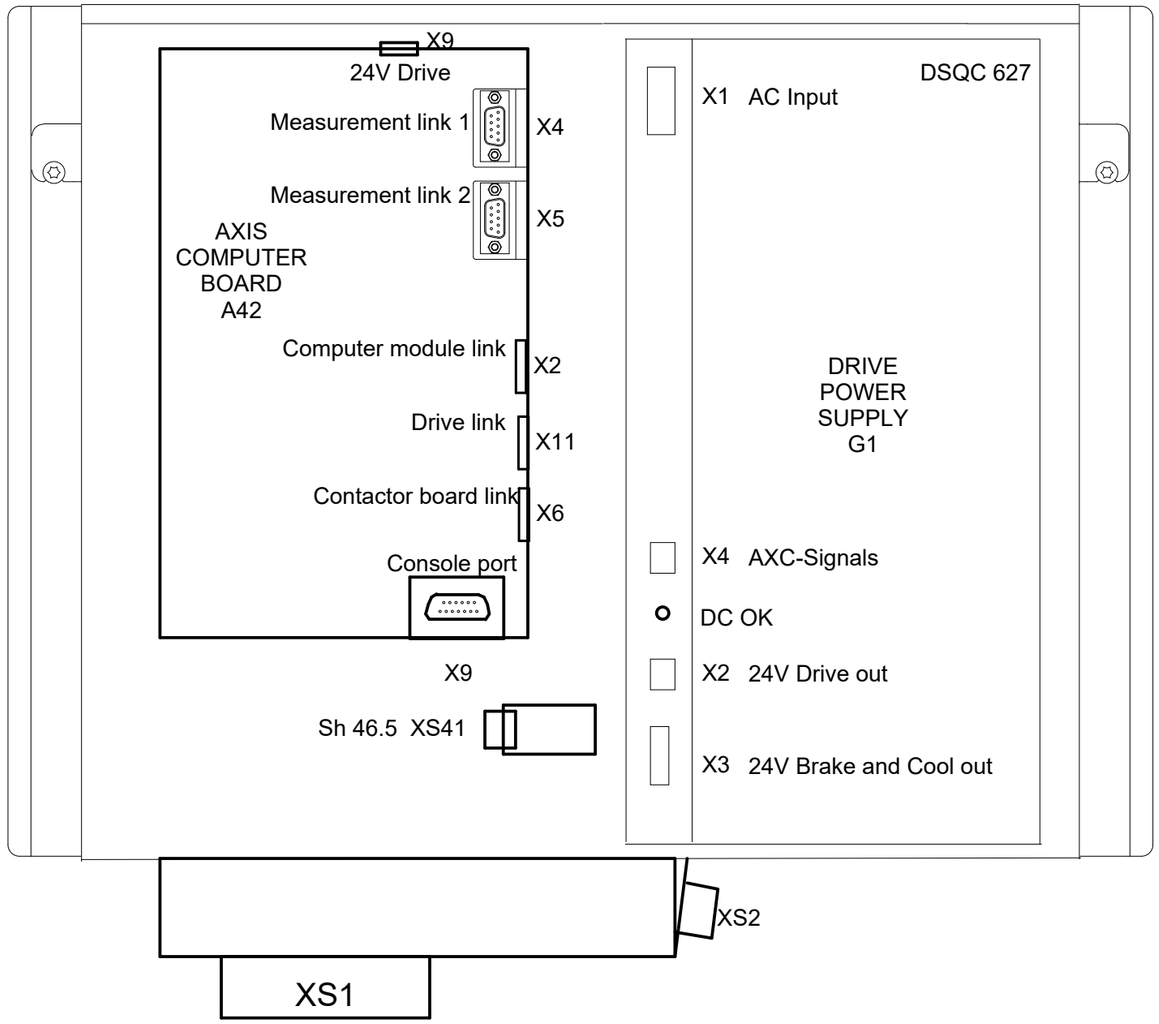

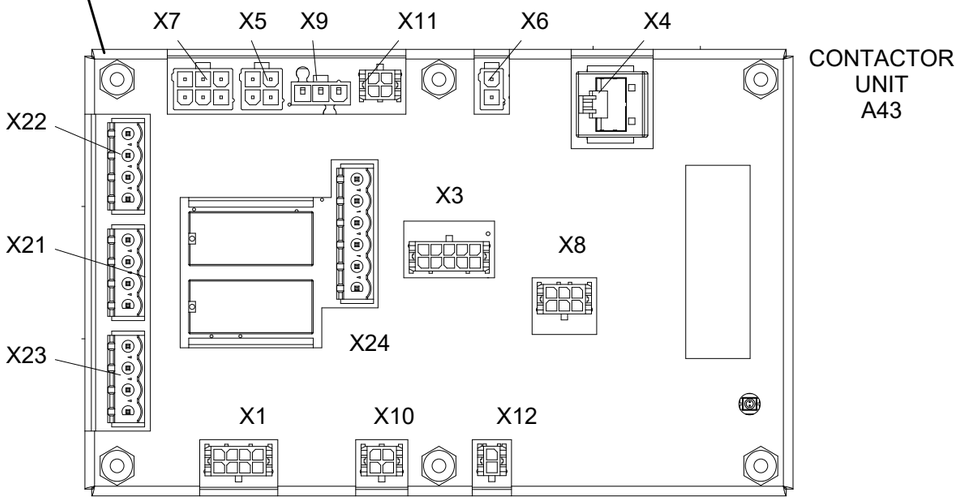

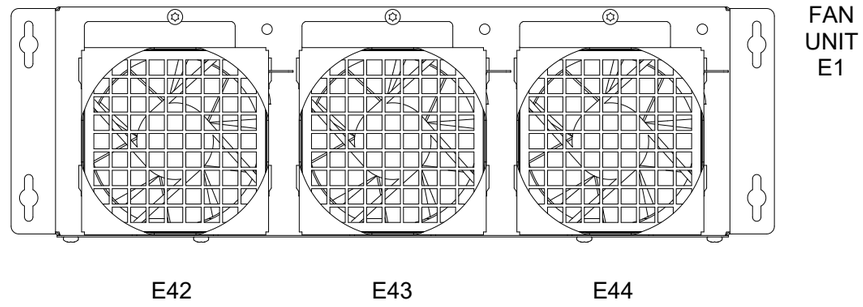

Latest revision:		Lab/Office: RA/RDP	PMC DESIGN 15 Rel: 24B VIEW OF DRIVE MODULE LV	Status: Approved	Plant: = Location: + Sublocation: +
Prepared by, date: A Hägglund	Approved by, date: S Hällgren 2024-03-15			Document no. 3HAC026871-020	Rev. Ind 15

Page 42
Next 43
Total 125

We reserve all rights in this document and in the information contained therein. Reproduction, use or disclosure to third parties without express authority is strictly forbidden. © Copyright ABB

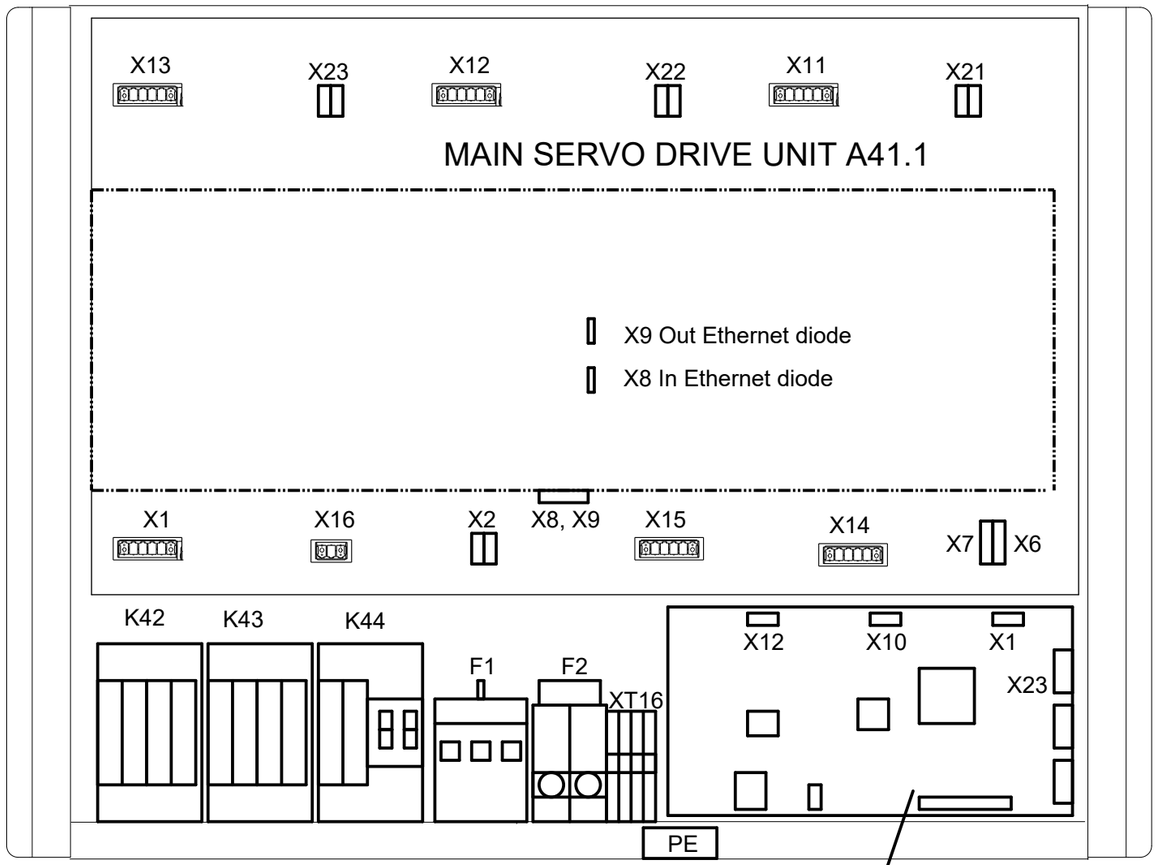

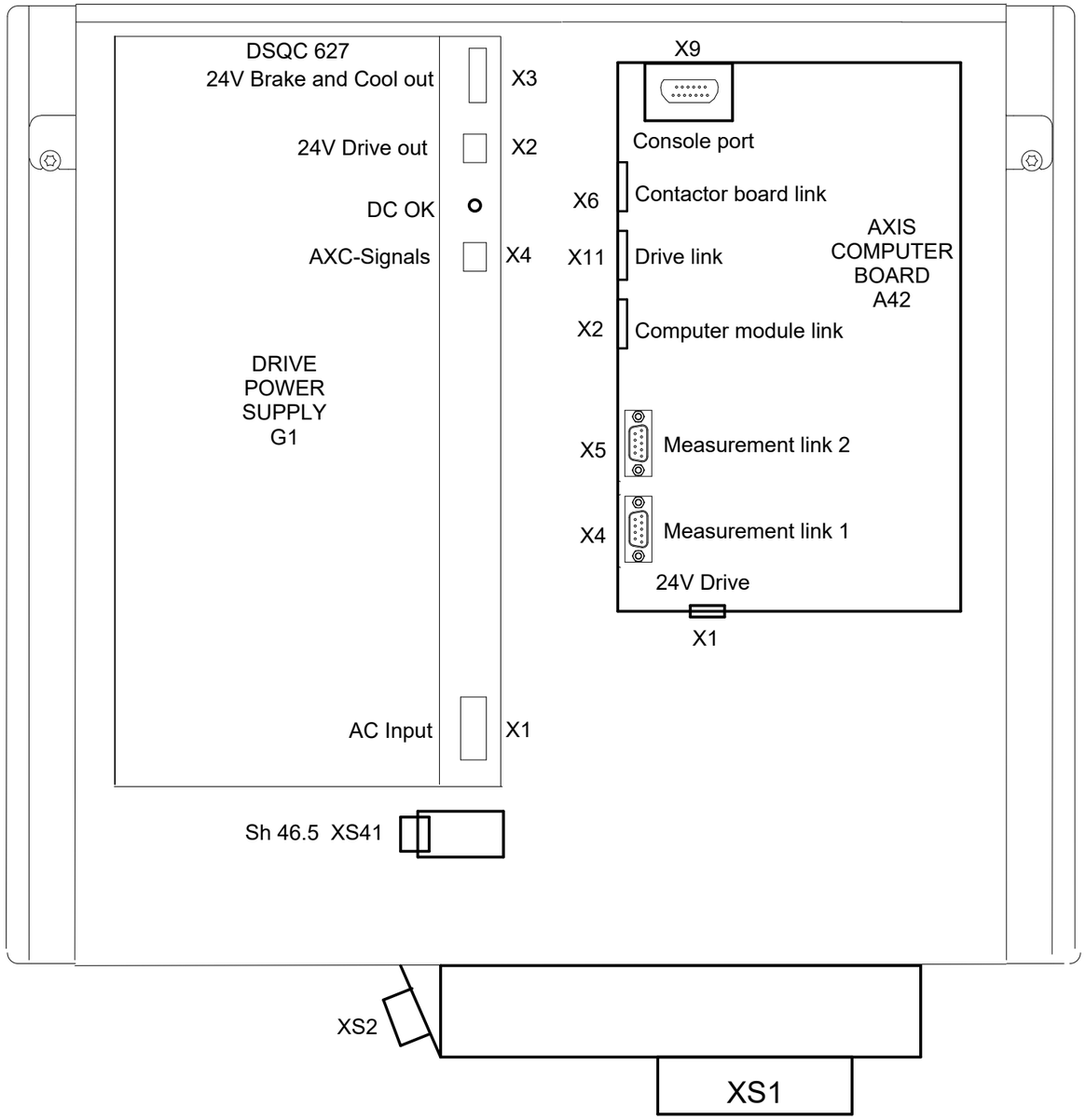

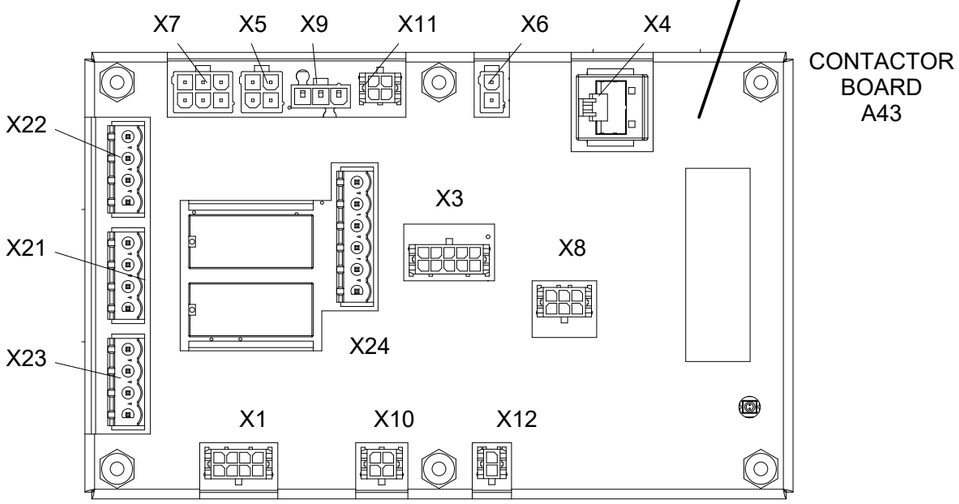

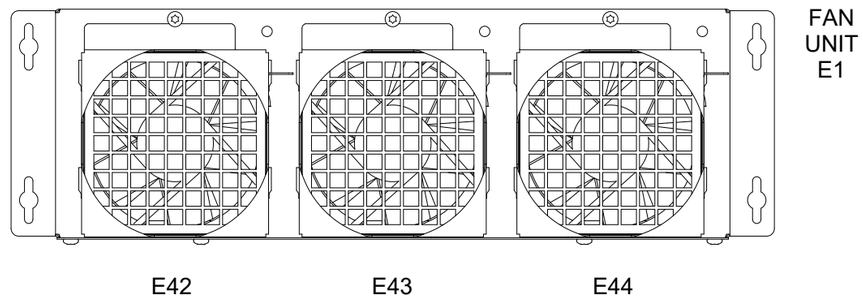

Latest revision:		ABB Lab/Office: RA/RDP	PMC DESIGN 15 Rel: 24B VIEW OF DRIVE MODULE HV	Status: Approved	Plant: = Location: + Sublocation: +
Prepared by, date: A Hägglund	Approved by, date: S Hällgren 2024-03-15			Document no. 3HAC026871-020	Rev. Ind 15
					Page 43 Next 44 Total 125

We reserve all rights in this document and in the information contained therein. Reproduction, use or disclosure to third parties without express authority is strictly forbidden. © Copyright ABB

MAINS CONNECTION

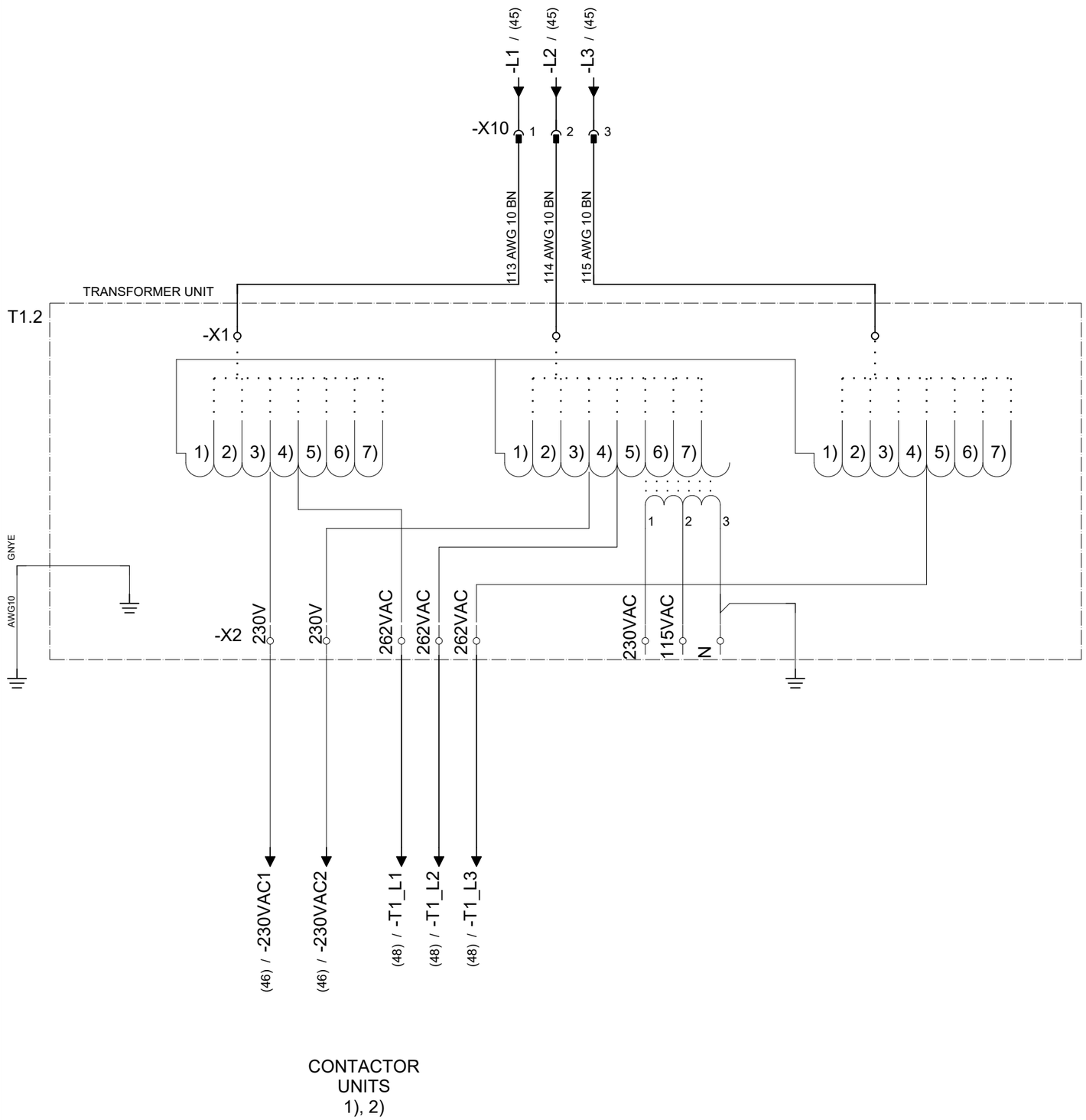

Option: Transformer T1.2 L1-L2-L3 = 262V
if IRB120 - 360, 14x0 - 44x0, 6400R

T1.2	(4,2kVA)	(4,2kVA)	(4,2kVA)	(6,0kVA)
Terminal	3HAC037016-001	3HAC037017-001	3HAC037018-001	3HAC024180-001
1)	200V	400V	440V	200V
2)	220V	—	480V	220V
3)	—	—	500V	400V
4)	—	—	600V	440V
5)	—	—	—	480V
6)	—	—	—	500V
7)	—	—	—	600V

Latest revision:		ABB Lab/Office: RA/RDP	PMC DESIGN 15 Rel: 24B TRANSFORMER UNIT 262V	Status: Approved	Plant: = Location: + Sublocation: +
Prepared by, date: A Hägglund	Approved by, date: S Hällgren 2024-03-15			Document no. 3HAC026871-020	Rev. Ind 15

We reserve all rights in this document and in the information contained therein. Reproduction, use or disclosure to third parties without express authority is strictly forbidden. © Copyright ABB

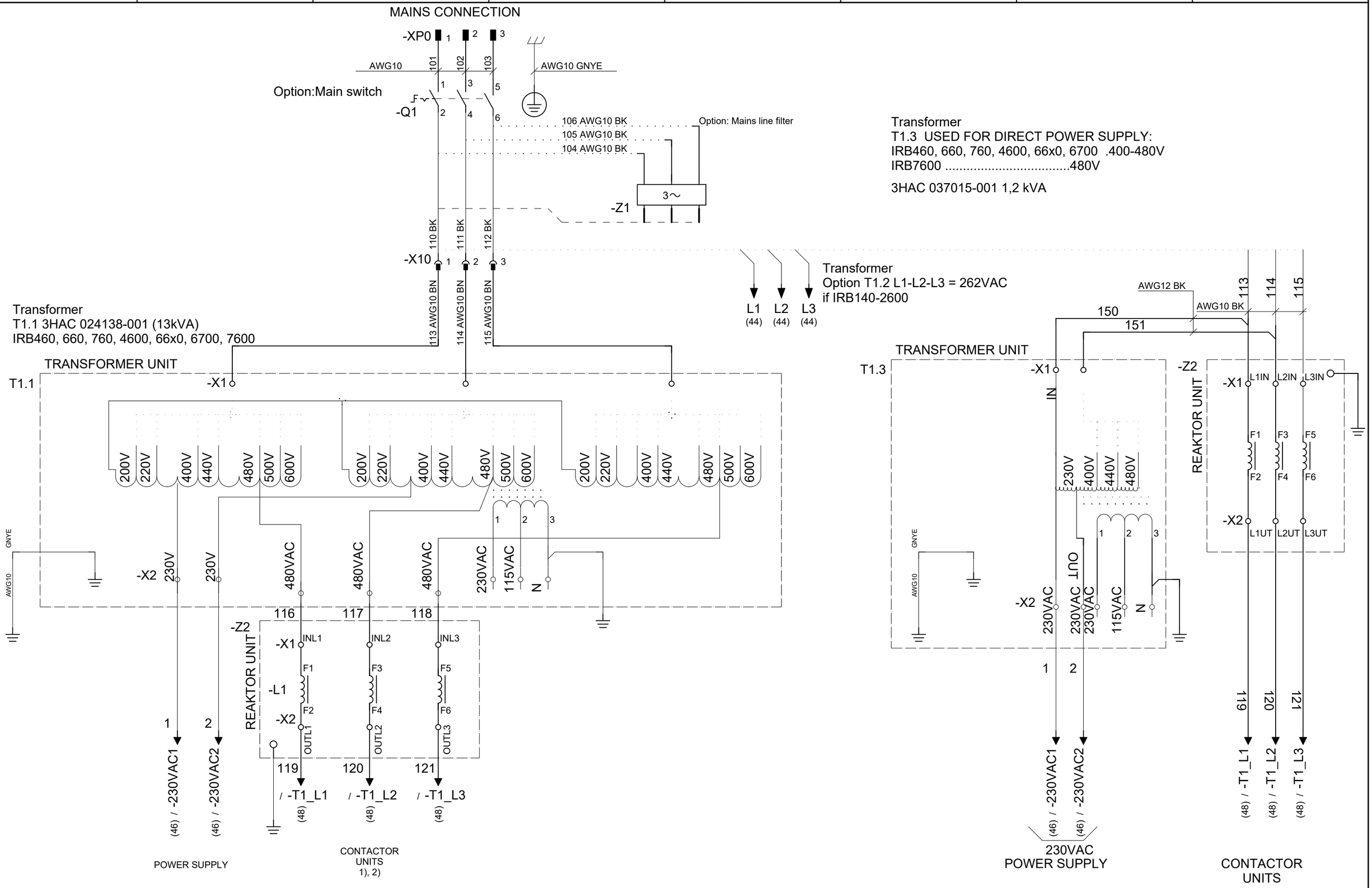

Latest revision:		ABB Lab/Office: RA/RDP	PMC DESIGN 15 Rel: 24B TRANSFORMER UNIT 480V	Status: Approved	Plant: = Location: + Sublocation: +
Prepared by, date: A Hägglund	Approved by, date: S Hällgren 2024-03-15			Document no. 3HAC026871-020	Rev. Ind 15
					Page 45 Next 46 Total 125

We reserve all rights in this document and in the information contained therein. Reproduction, use or disclosure to third parties without express authority is strictly forbidden. © Copyright ABB

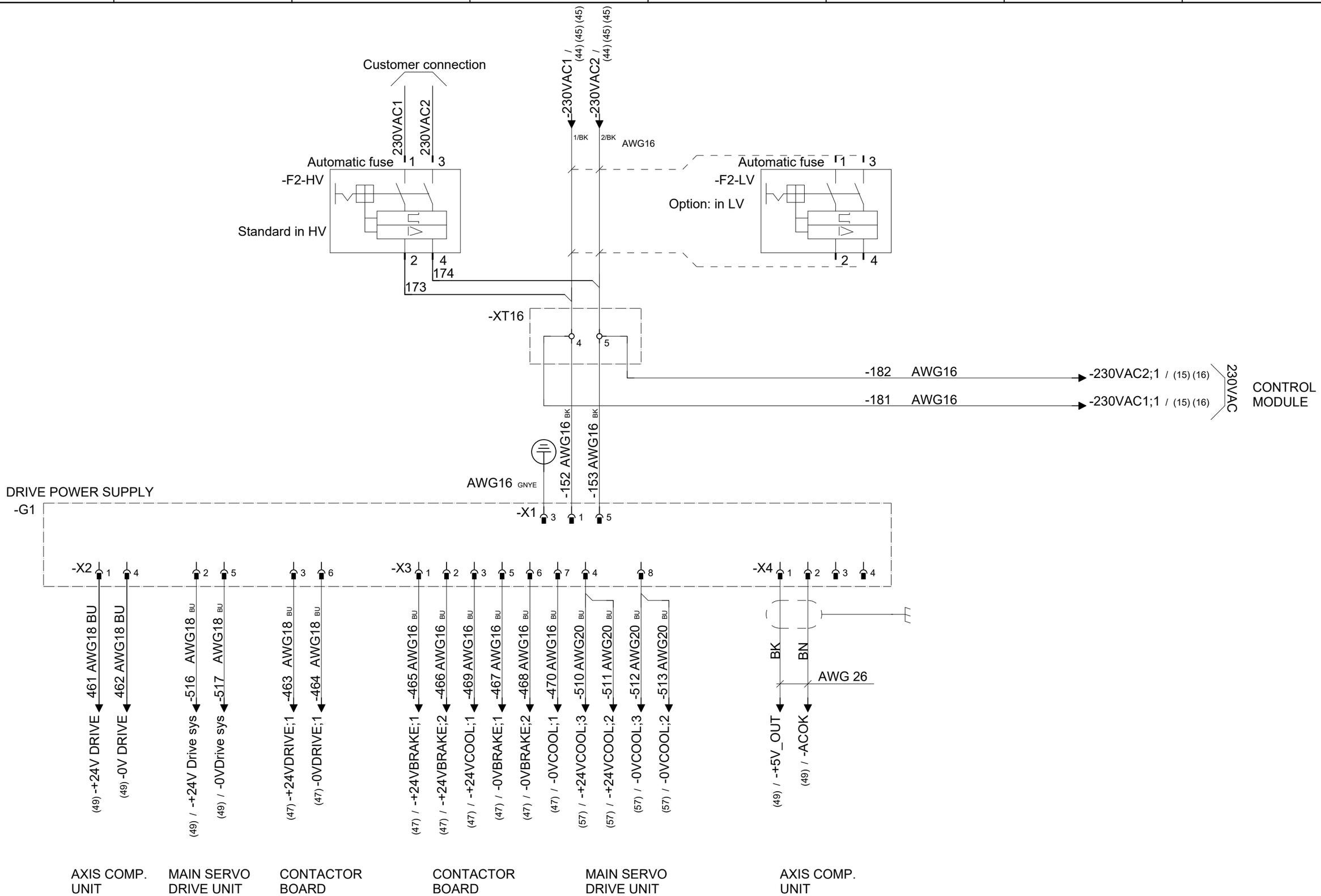

Latest revision:	ABB	Lab/Office: RA/RDP	PMC DESIGN 15 Rel: 24B POWER SUPPLY	Status: Approved	Plant: = Location: + Sublocation: +
				Document no. 3HAC026871-020	Rev. Ind 15
					Page 46 Next 47 Total 125
Prepared by, date: A Hägglund	Approved by, date: S Hällgren 2024-03-15				

We reserve all rights in this document and in the information contained therein. Reproduction, use or disclosure to third parties without express authority is strictly forbidden. © Copyright ABB

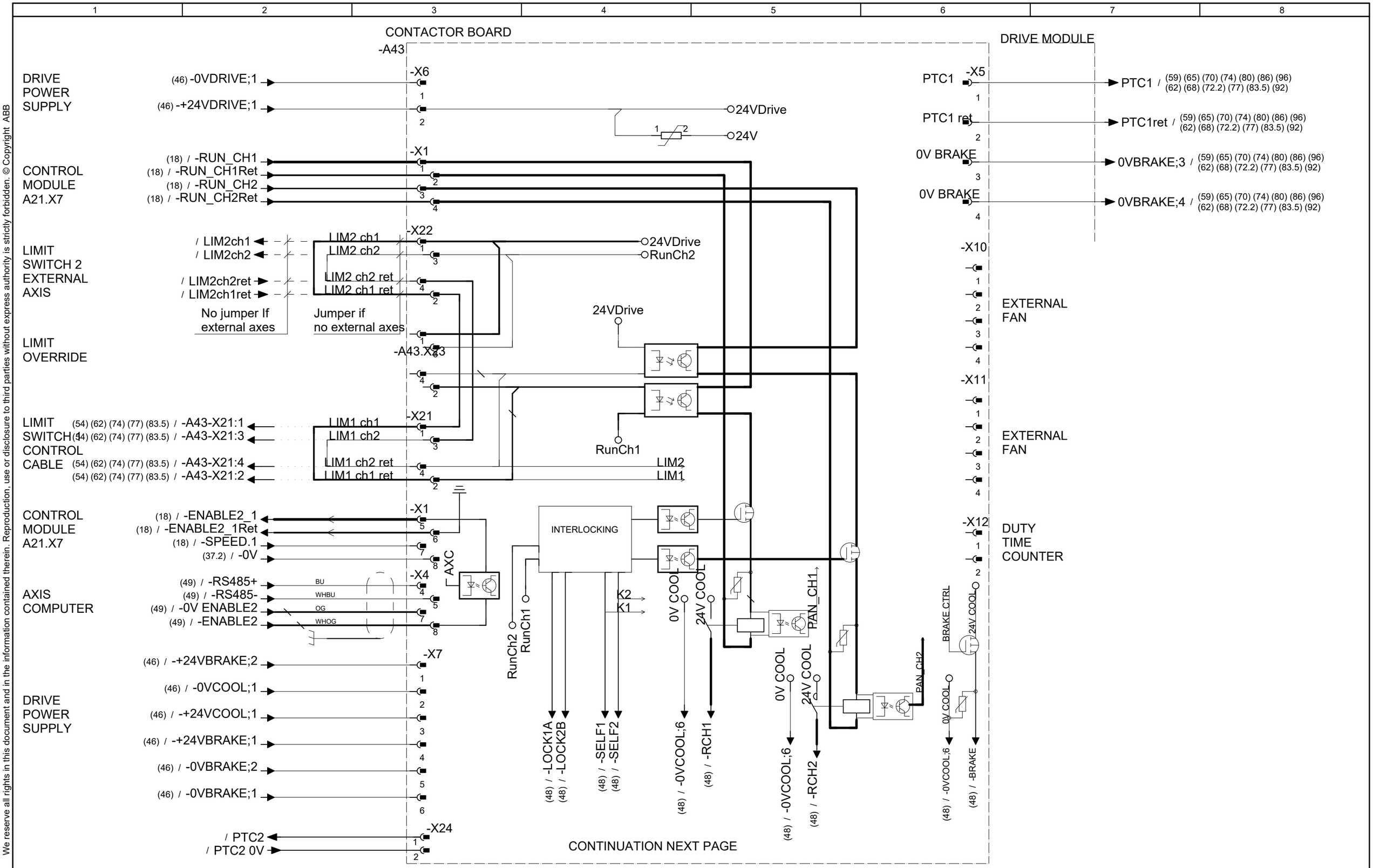

Latest revision:		Lab/Office: RA/RDP	PMC DESIGN 15 Rel: 24B CONTACTOR BOARD	Status: Approved	Plant: = Location: + Sublocation: +
Prepared by, date: A Hägglund	Approved by, date: S Hällgren 2024-03-15			Document no. 3HAC026871-020	Rev. Ind 15
					Page 47 Next 48 Total 125

We reserve all rights in this document and in the information contained therein. Reproduction, use or disclosure to third parties without express authority is strictly forbidden. © Copyright ABB

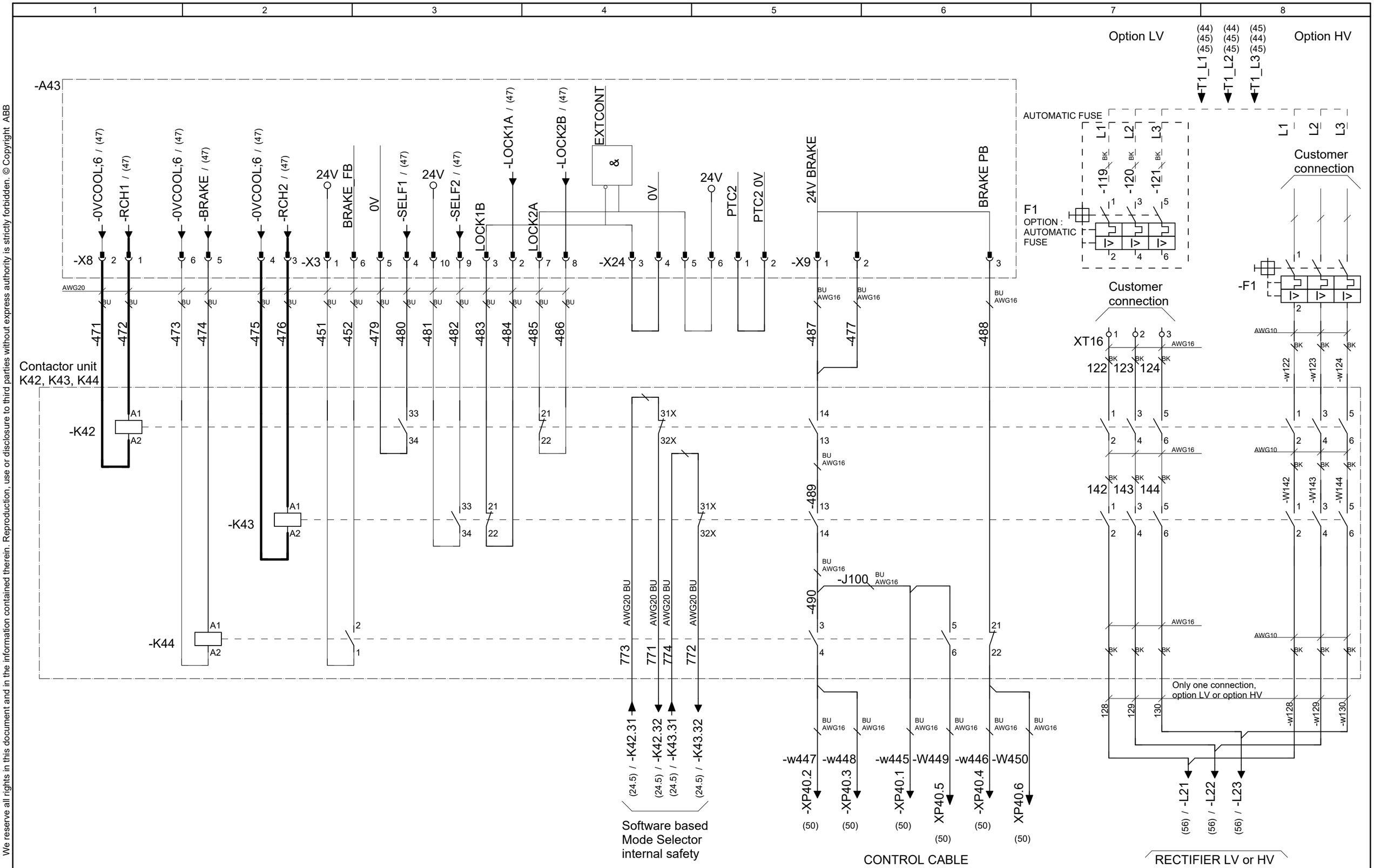

Latest revision:		ABB Lab/Office: RA/RDP	PMC DESIGN 15 Rel: 24B CONTACTOR UNIT	Status: Approved	Plant: = Location: + Sublocation: +
				Document no. 3HAC026871-020	Rev. Ind 15
					Page 48 Next 49 Total 125
Prepared by, date: A Hägglund	Approved by, date: S Hällgren 2024-03-15				

We reserve all rights in this document and in the information contained therein. Reproduction, use or disclosure to third parties without express authority is strictly forbidden. © Copyright ABB

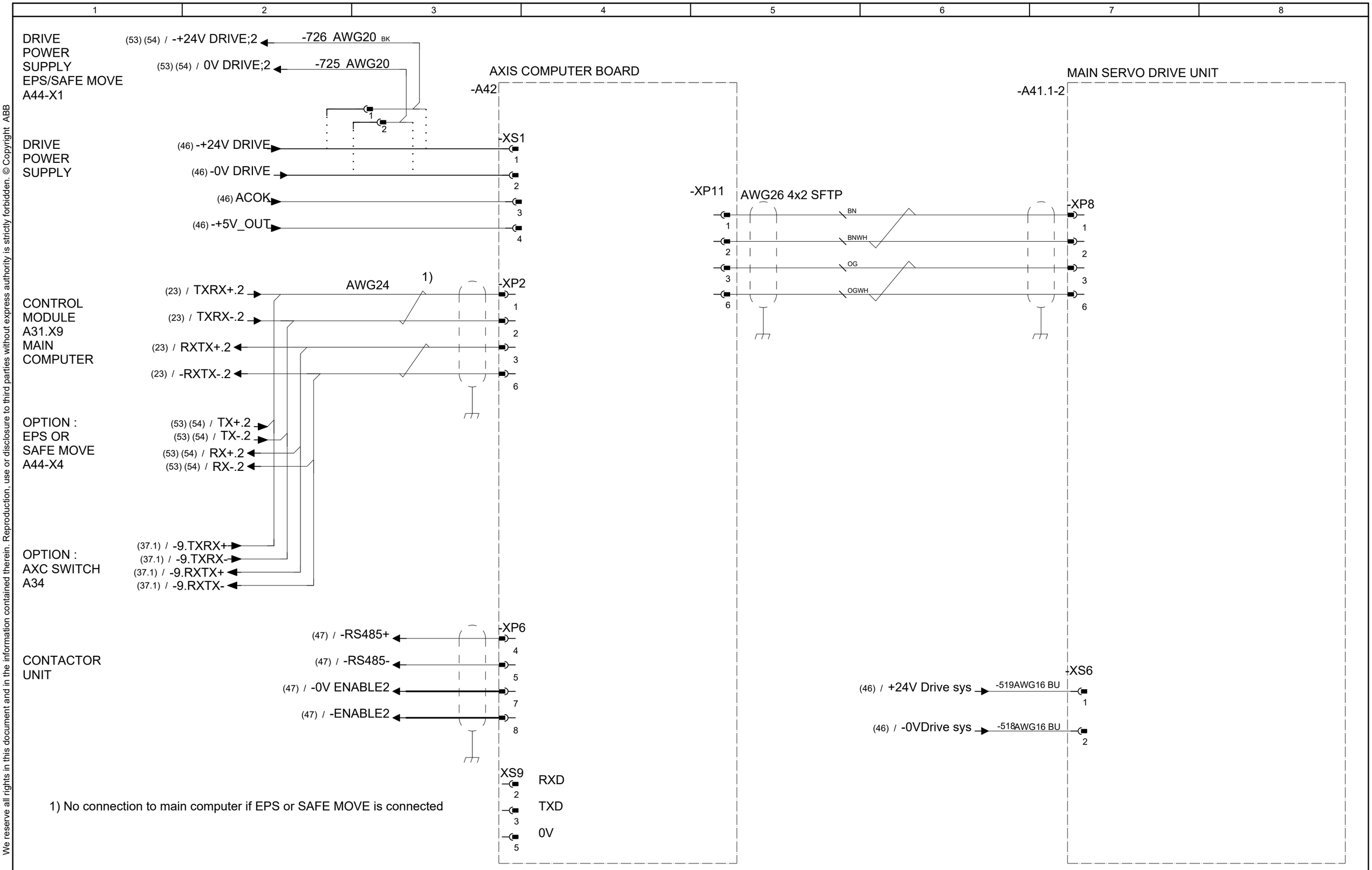

1) No connection to main computer if EPS or SAFE MOVE is connected

Latest revision:		ABB	Lab/Office: RA/RDP	PMC DESIGN 15 Rel: 24B AXIS COMPUTER and MAIN SERVO DRIVE UNITS	Status: Approved	Plant: = Location: + Sublocation: +
Prepared by, date: A Hägglund	Approved by, date: S Hällgren 2024-03-15				Document no. 3HAC026871-020	Rev. Ind 15
						Page 49 Next 50 Total 125

We reserve all rights in this document and in the information contained therein. Reproduction, use or disclosure to third parties without express authority is strictly forbidden. © Copyright ABB

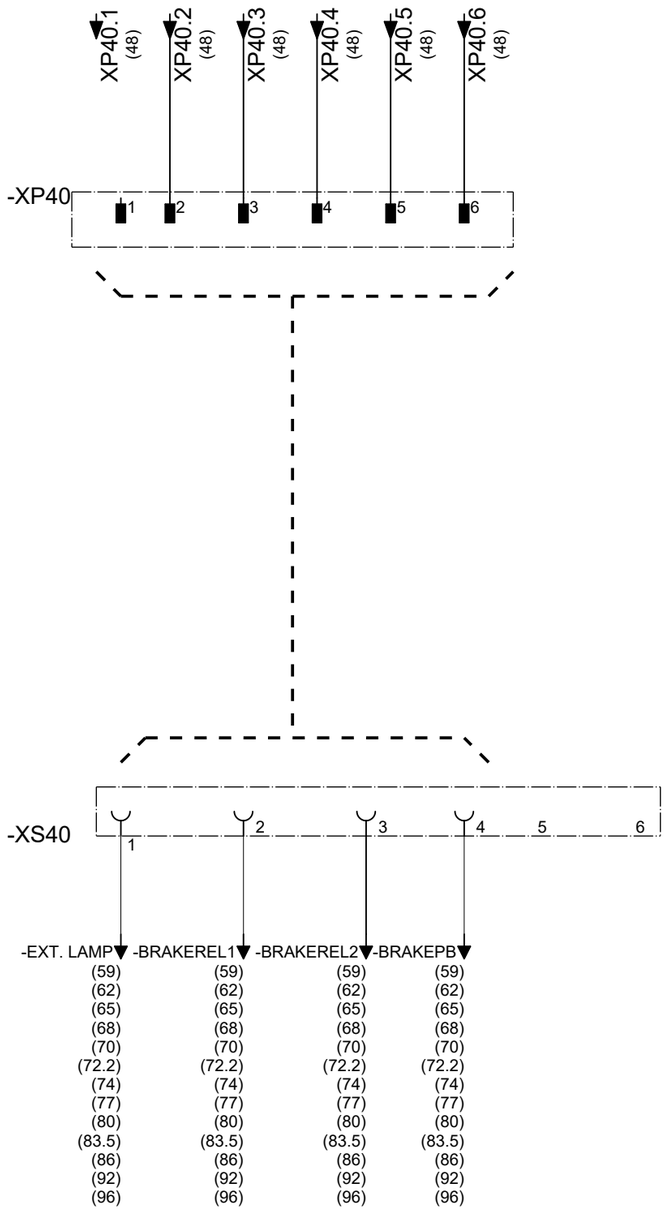

CONTROL CABLE

Latest revision:		Lab/Office: RA/RDP	PMC DESIGN 15 Rel: 24B CONTACTOR UNIT	Status: Approved	Plant: = Location: + Sublocation: +	
				Document no. 3HAC026871-020	Rev. Ind 15	Page 50 Next 51 Total 125
Prepared by, date: A Hägglund	Approved by, date: S Hällgren 2024-03-15					

We reserve all rights in this document and in the information contained therein. Reproduction, use or disclosure to third parties without express authority is strictly forbidden. © Copyright ABB

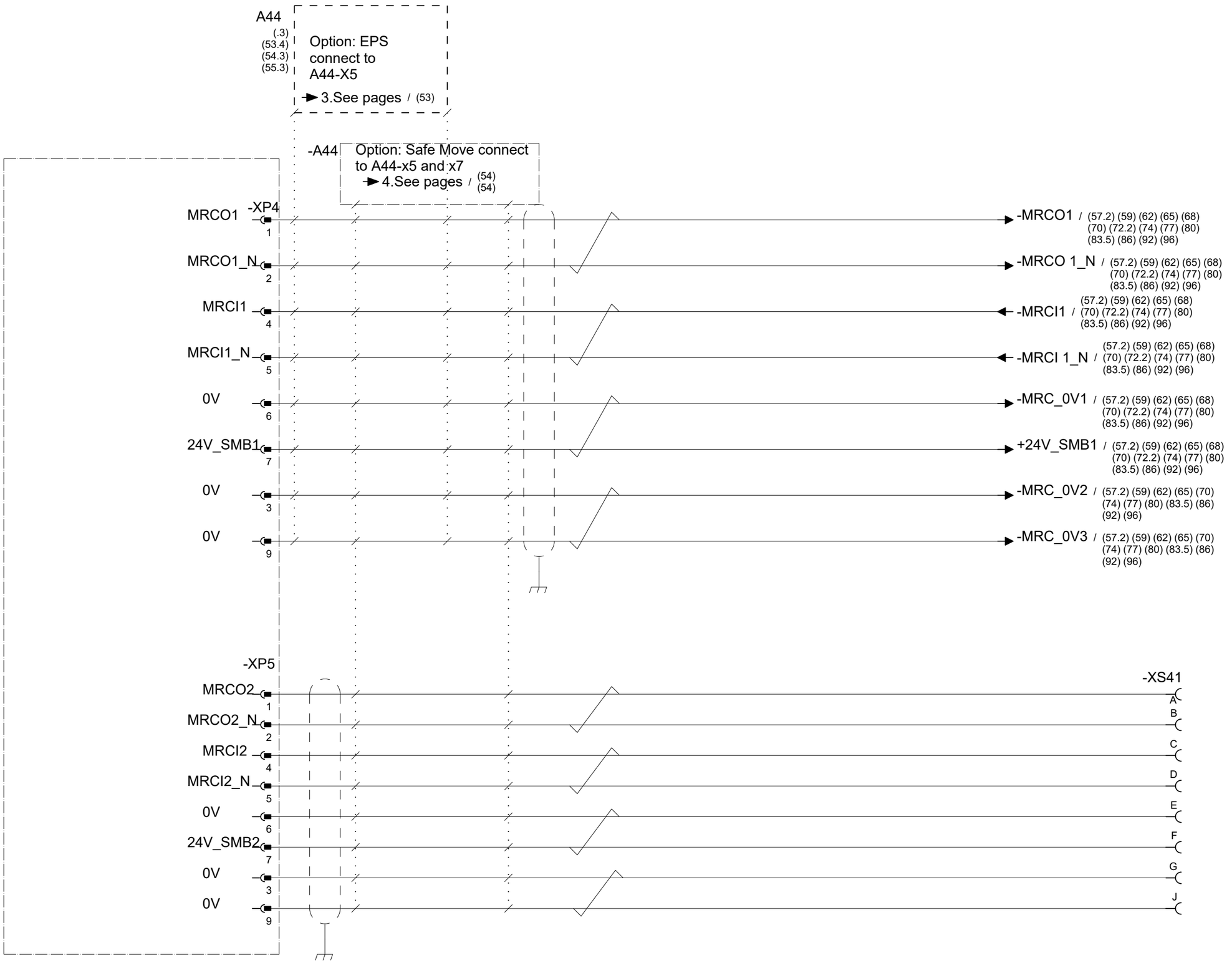

CONTROL SIGNAL XS2

Latest revision:		ABB	Lab/Office: RA/RDP	PMC DESIGN 15 Rel: 24B AXIS COMPUTER BOARD	Status: Approved
					Plant: = Location: + Sublocation: +
					Document no. 3HAC026871-020
					Rev. Ind 15
					Page 51 Next 52 Total 125
Prepared by, date: A Hägglund	Approved by, date: S Hällgren 2024-03-15				

We reserve all rights in this document and in the information contained therein. Reproduction, use or disclosure to third parties without express authority is strictly forbidden. © Copyright ABB

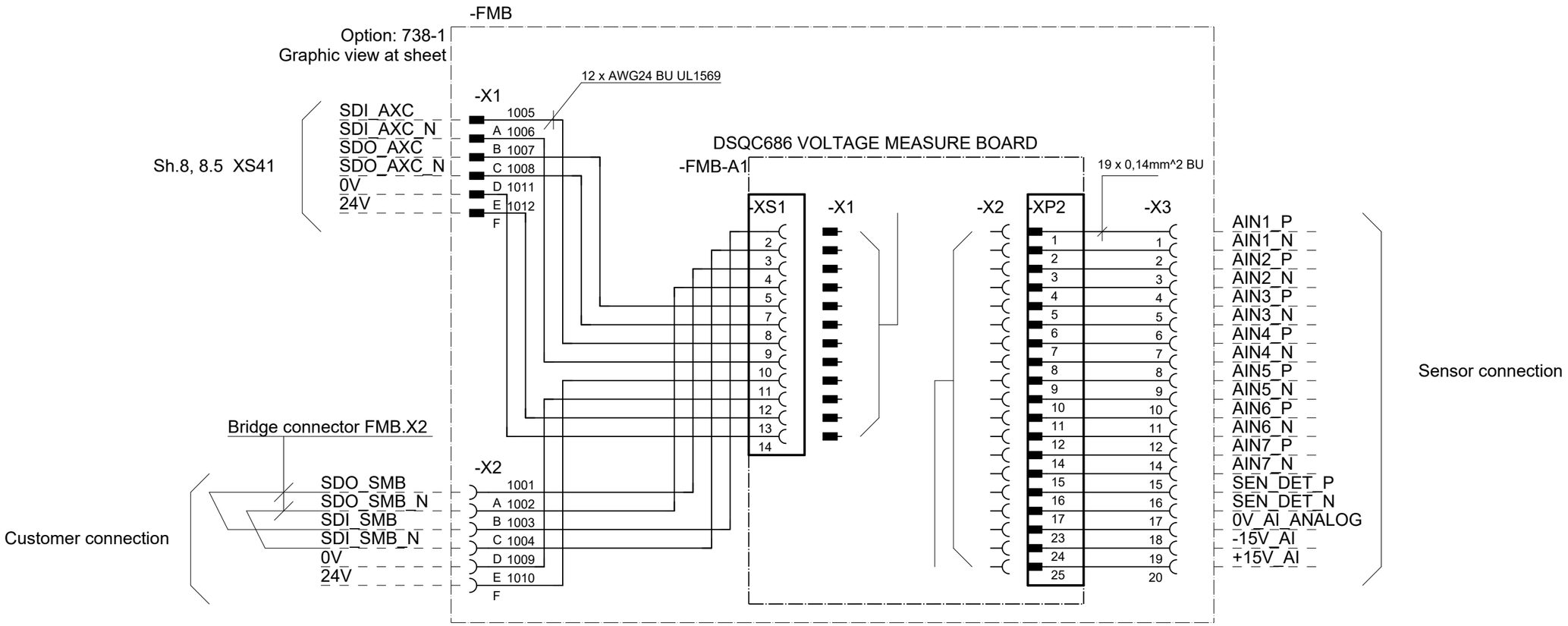

Latest revision:		Lab/Office: RA/RDP	PMC DESIGN 15 Rel: 24B FORCE MEASUREMENT BOX	Status: Approved	Plant: = Location: + Sublocation: +
Prepared by, date: A Hägglund	Approved by, date: S Hällgren 2024-03-15			Document no. 3HAC026871-020	Rev. Ind 15
					Page 52 Next 53 Total 125

We reserve all rights in this document and in the information contained therein. Reproduction, use or disclosure to third parties without express authority is strictly forbidden. © Copyright ABB

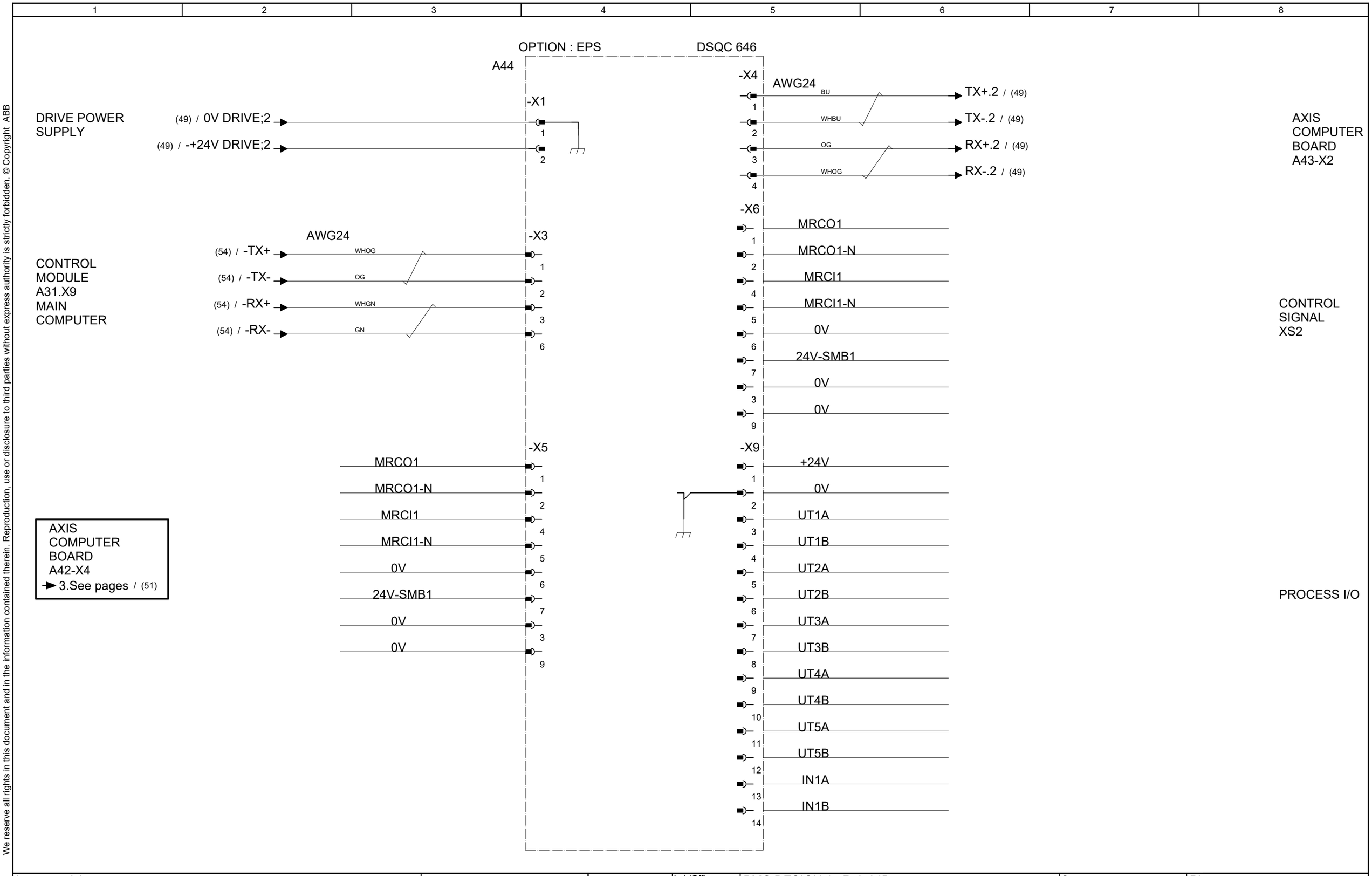

Latest revision:		Lab/Office: RA/RDP	PMC DESIGN 15 Rel: 24B EPS	Status: Approved	Plant: = Location: + Sublocation: +
				Document no. 3HAC026871-020	Rev. Ind 15
Prepared by, date: A Hägglund	Approved by, date: S Hällgren 2024-03-15				Page 53 Next 54 Total 125

We reserve all rights in this document and in the information contained therein. Reproduction, use or disclosure to third parties without express authority is strictly forbidden. © Copyright ABB

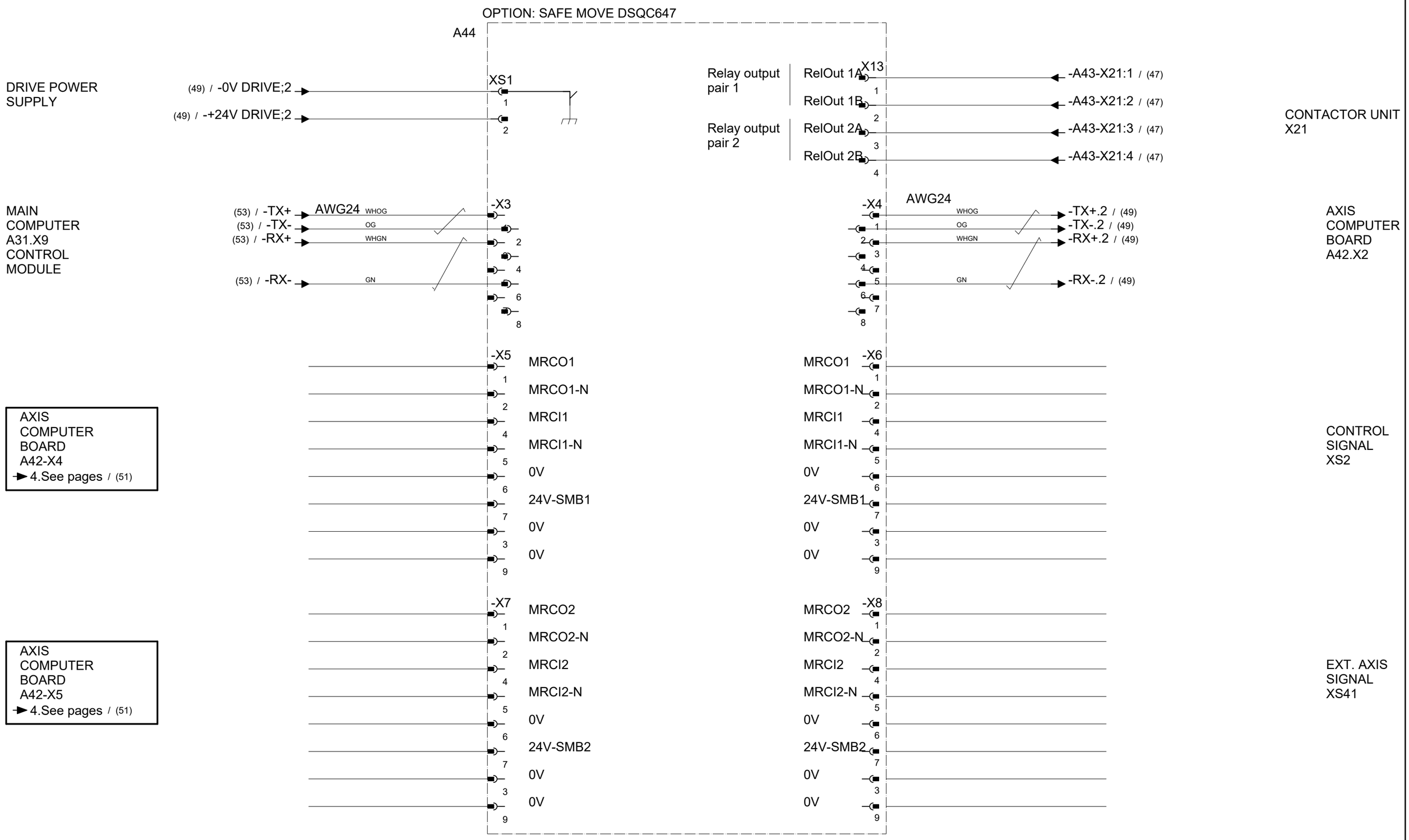

Latest revision:		Lab/Office: RA/RDP	PMC DESIGN 15 Rel: 24B SAFE MOVE	Status: Approved	Plant: = Location: + Sublocation: +
Prepared by, date: A Hägglund	Approved by, date: S Hällgren 2024-03-15			Document no. 3HAC026871-020	Rev. Ind 15

We reserve all rights in this document and in the information contained therein. Reproduction, use or disclosure to third parties without express authority is strictly forbidden. © Copyright ABB

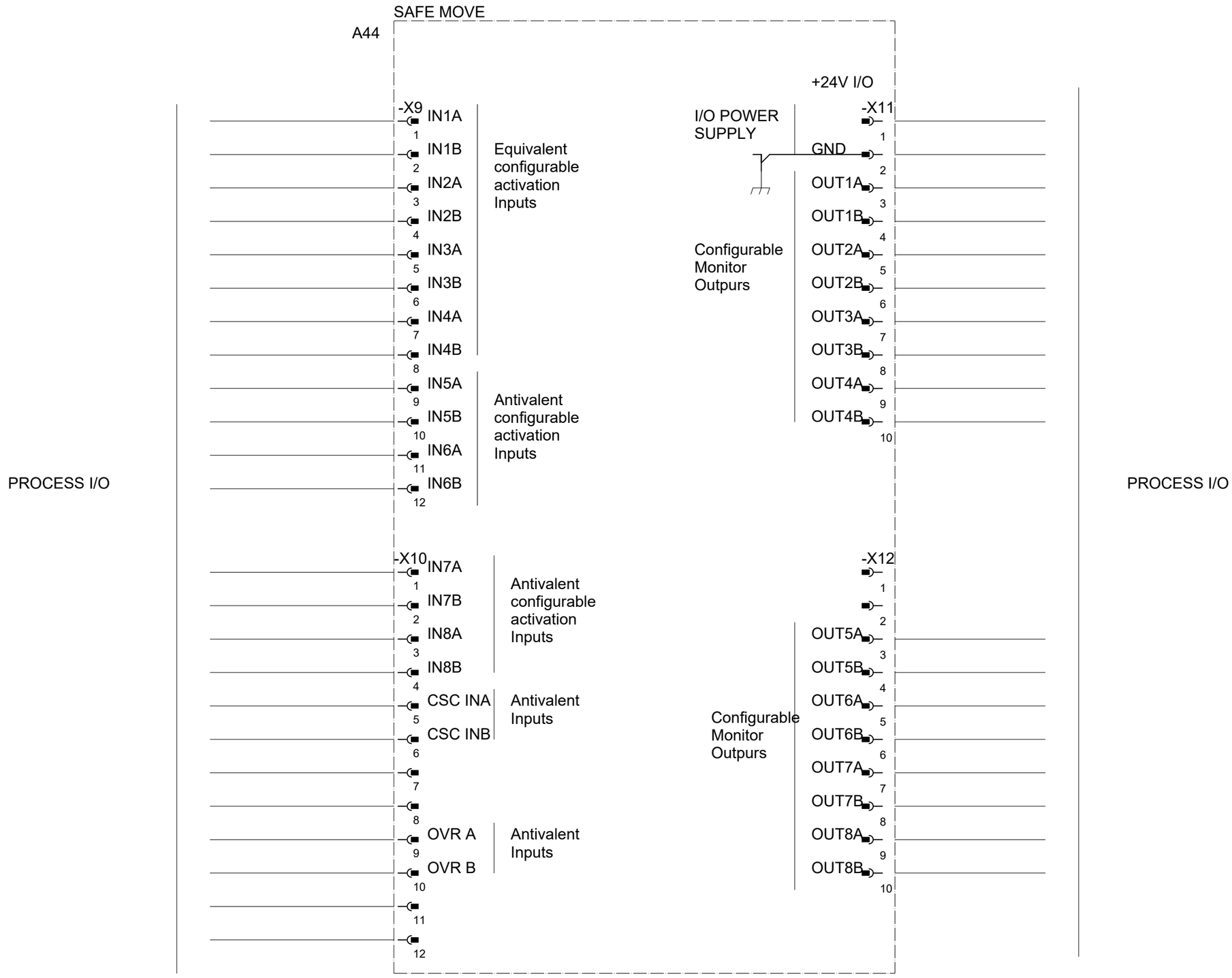

Latest revision:		ABB	Lab/Office: RA/RDP	PMC DESIGN 15 Rel: 24B SAFE MOVE	Status: Approved	Plant: = Location: + Sublocation: +
Prepared by, date: A Hägglund	Approved by, date: S Hällgren 2024-03-15				Document no. 3HAC026871-020	Rev. Ind 15
						Page 55 Next 56 Total 125

We reserve all rights in this document and in the information contained therein. Reproduction, use or disclosure to third parties without express authority is strictly forbidden. © Copyright ABB

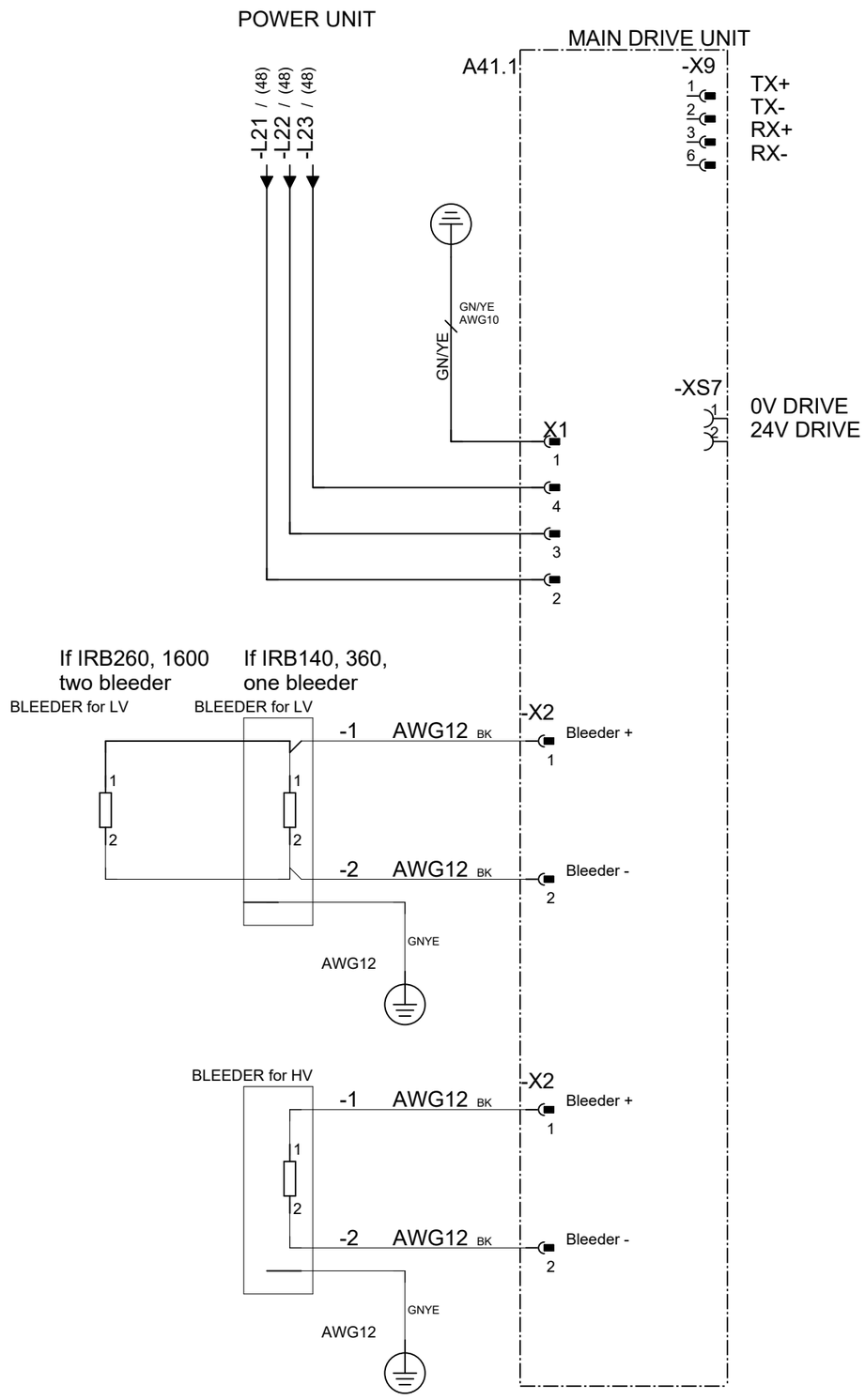

Latest revision:		Lab/Office: RA/RDP	PMC DESIGN 15 Rel: 24B MAIN DRIVE UNIT	Status: Approved	Plant: = Location: + Sublocation: +
Prepared by, date: A Hägglund	Approved by, date: S Hällgren 2024-03-15			Document no. 3HAC026871-020	Rev. Ind 15

We reserve all rights in this document and in the information contained therein. Reproduction, use or disclosure to third parties without express authority is strictly forbidden. © Copyright ABB

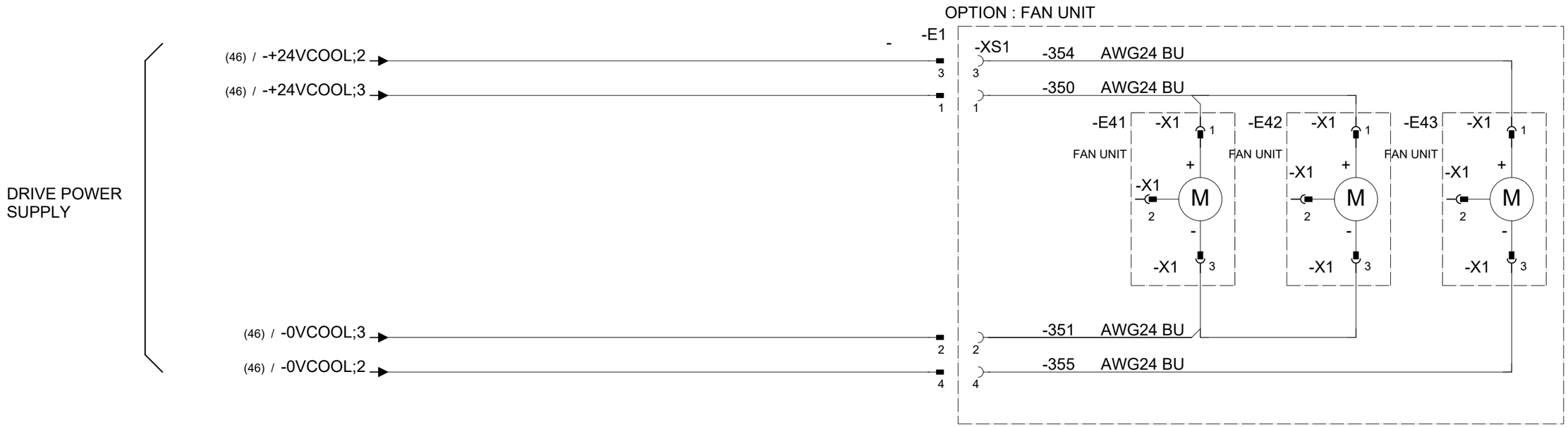

Latest revision:		ABB	Lab/Office: RA/RDP	PMC DESIGN 15 Rel: 24B OPTION : FAN UNIT	Status: Approved	Plant: = Location: + Sublocation: +
Prepared by, date: A Hägglund	Approved by, date: S Hällgren 2024-03-15				Document no. 3HAC026871-020	Rev. Ind 15
						Page 57 Next 57.1 Total 125

We reserve all rights in this document and in the information contained therein. Reproduction, use or disclosure to third parties without express authority is strictly forbidden. © Copyright ABB

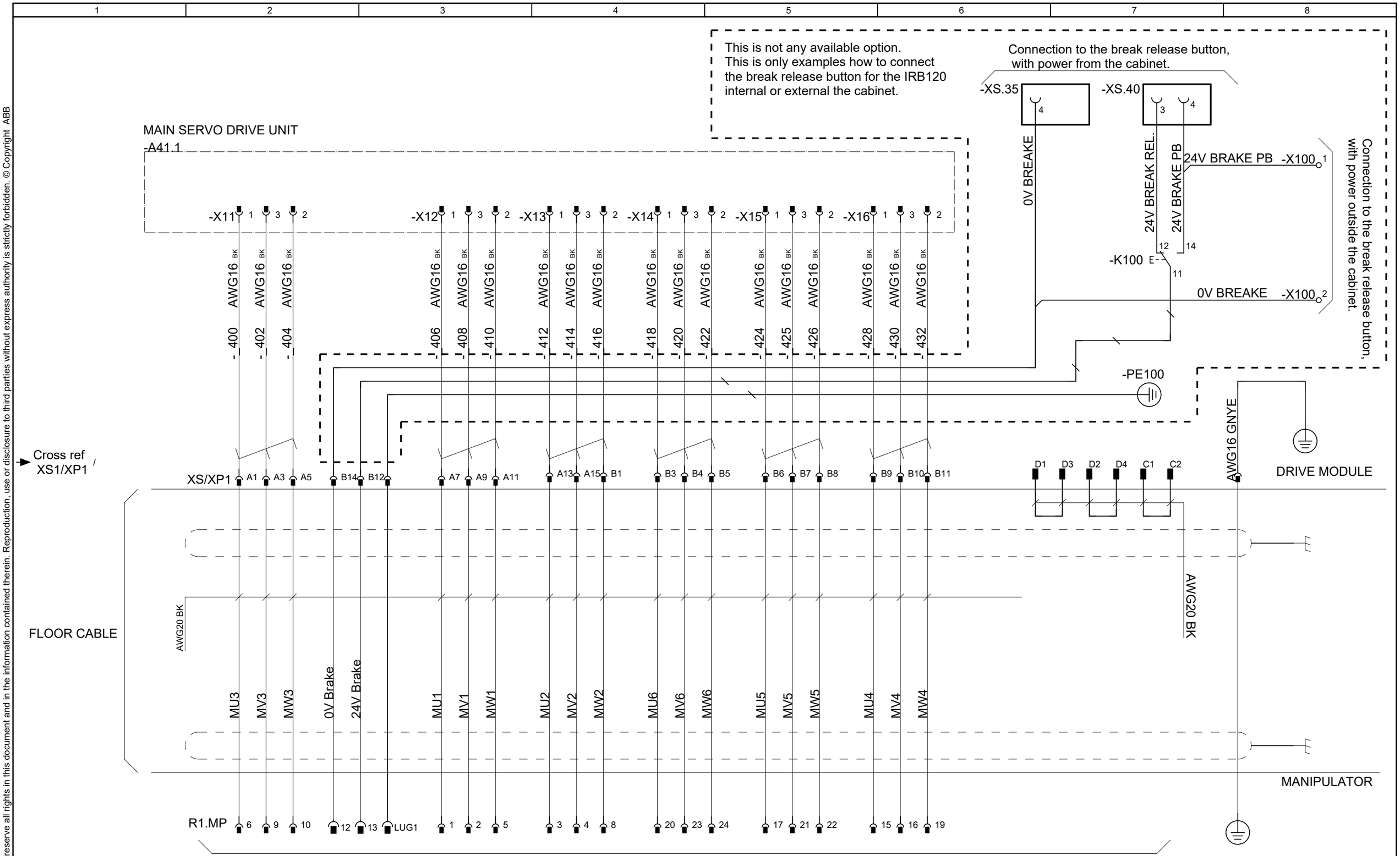

According to Manipulator circuit diagram 3HAC031408-003

Latest revision:		Lab/Office: RA/RDP	PMC DESIGN 15 Rel: 24B SERVO DRIVE SYSTEM IRB 120	Status: Approved	Plant: = Location: + Sublocation: +
				Document no. 3HAC026871-020	Rev. Ind 15
					Page 57.1 Next 57.2 Total 125
Prepared by, date: A Hägglund	Approved by, date: S Hällgren 2024-03-15				

We reserve all rights in this document and in the information contained therein. Reproduction, use or disclosure to third parties without express authority is strictly forbidden. © Copyright ABB

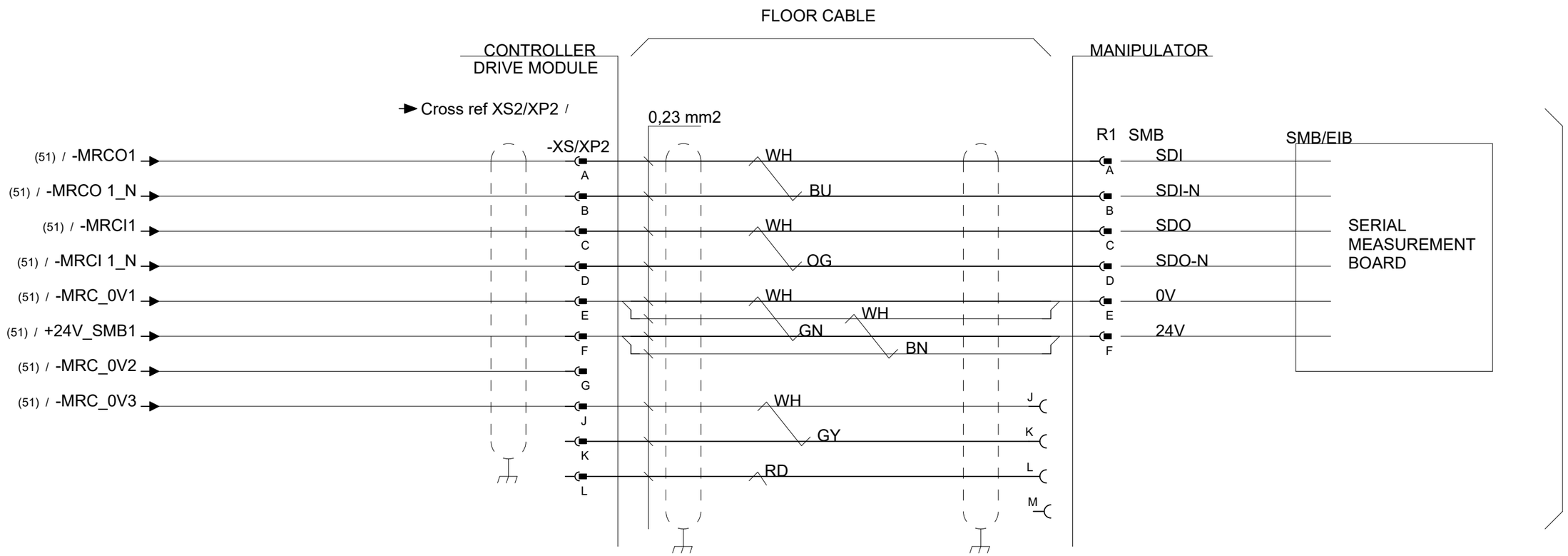

Latest revision:		ABB	Lab/Office: RA/RDP	PMC DESIGN 15 Rel: 24B CONTROL CABLE IRB 120	Status: Approved	Plant: = Location: + Sublocation: +
Prepared by, date: A Hägglund	Approved by, date: S Hällgren 2024-03-15				Document no. 3HAC026871-020	Rev. Ind 15

Page	57.2
Next	57.3
Total	125

We reserve all rights in this document and in the information contained therein. Reproduction, use or disclosure to third parties without express authority is strictly forbidden. © Copyright ABB

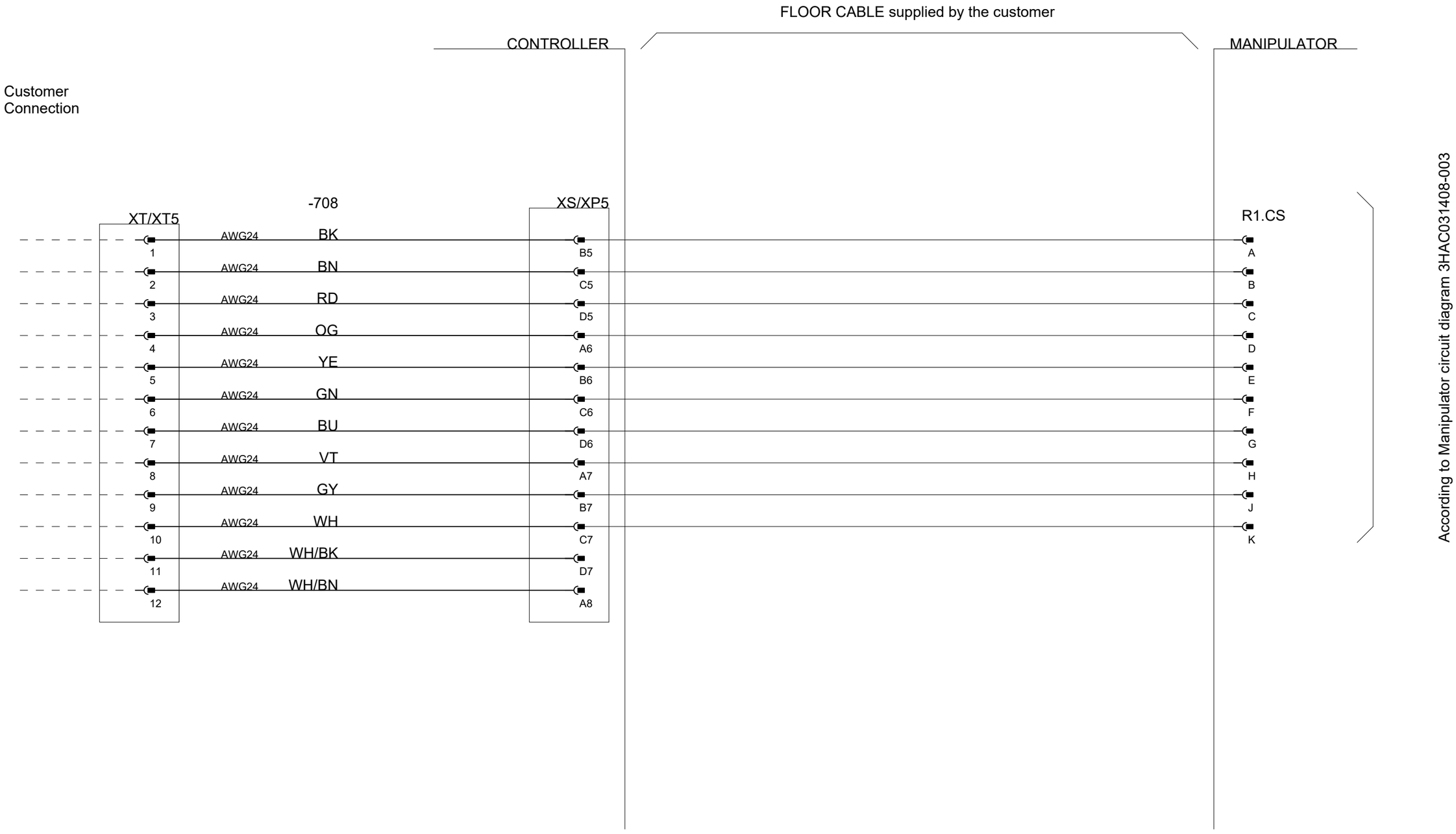

Latest revision:		Lab/Office: RA/RDP	PMC DESIGN 15 Rel: 24B CUSTOMER SIGNALS IRB 120	Status: Approved	Plant: = Location: + Sublocation: +
Prepared by, date: A Hägglund	Approved by, date: S Hällgren 2024-03-15			Document no. 3HAC026871-020	Rev. Ind 15
					Page 57.3 Next 58 Total 125

We reserve all rights in this document and in the information contained therein. Reproduction, use or disclosure to third parties without express authority is strictly forbidden. © Copyright ABB

Cabinet module

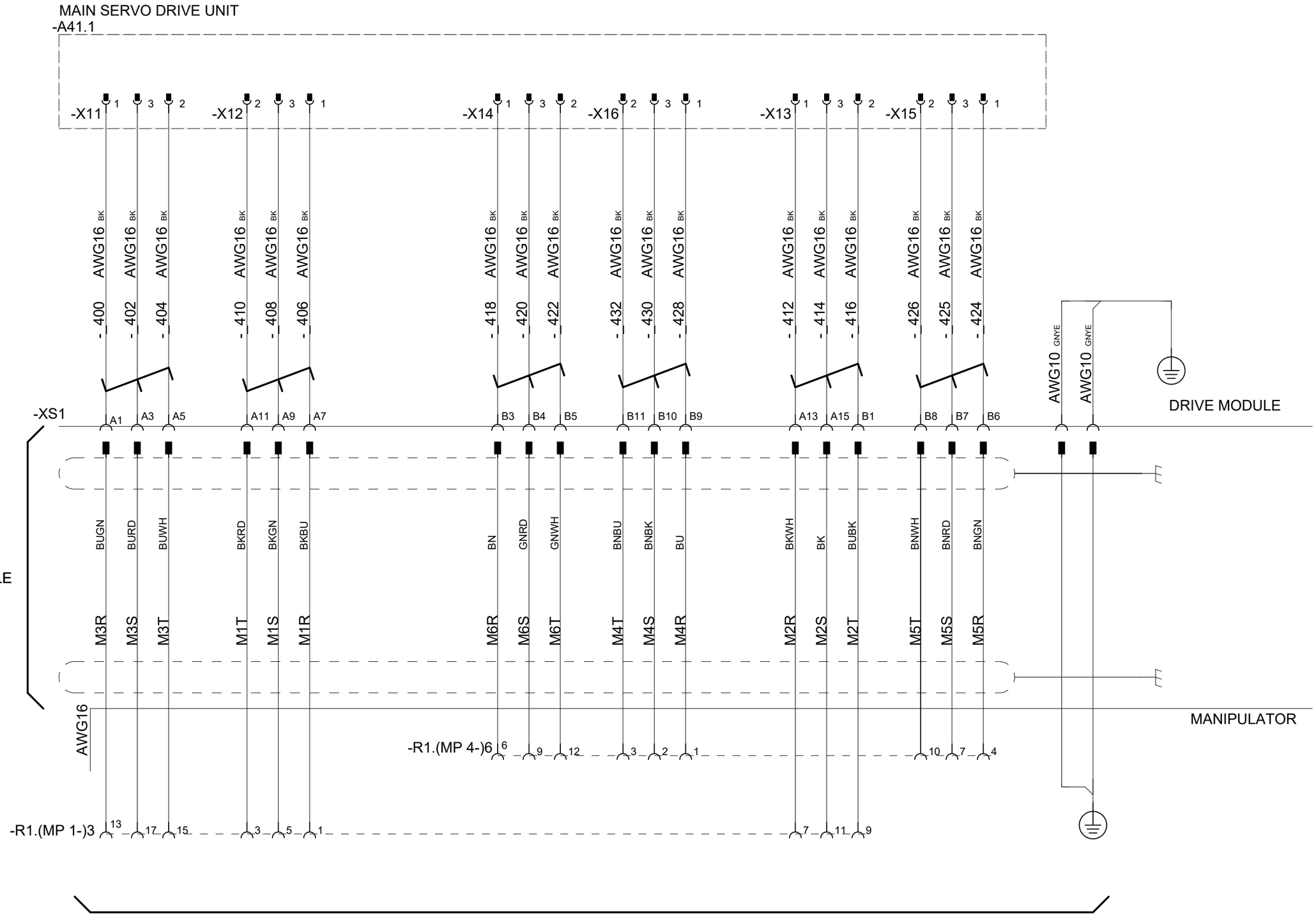

According to Manipulator circuit diagram 3HAC6816-3

Latest revision:		Lab/Office: RA/RDP	PMC DESIGN 15 Rel: 24B SERVO DRIVE SYSTEM IRB 140	Status: Approved	Plant: = Location: + Sublocation: +
Prepared by, date: A Hägglund	Approved by, date: S Hällgren 2024-03-15			Document no. 3HAC026871-020	Rev. Ind 15

We reserve all rights in this document and in the information contained therein. Reproduction, use or disclosure to third parties without express authority is strictly forbidden. © Copyright ABB

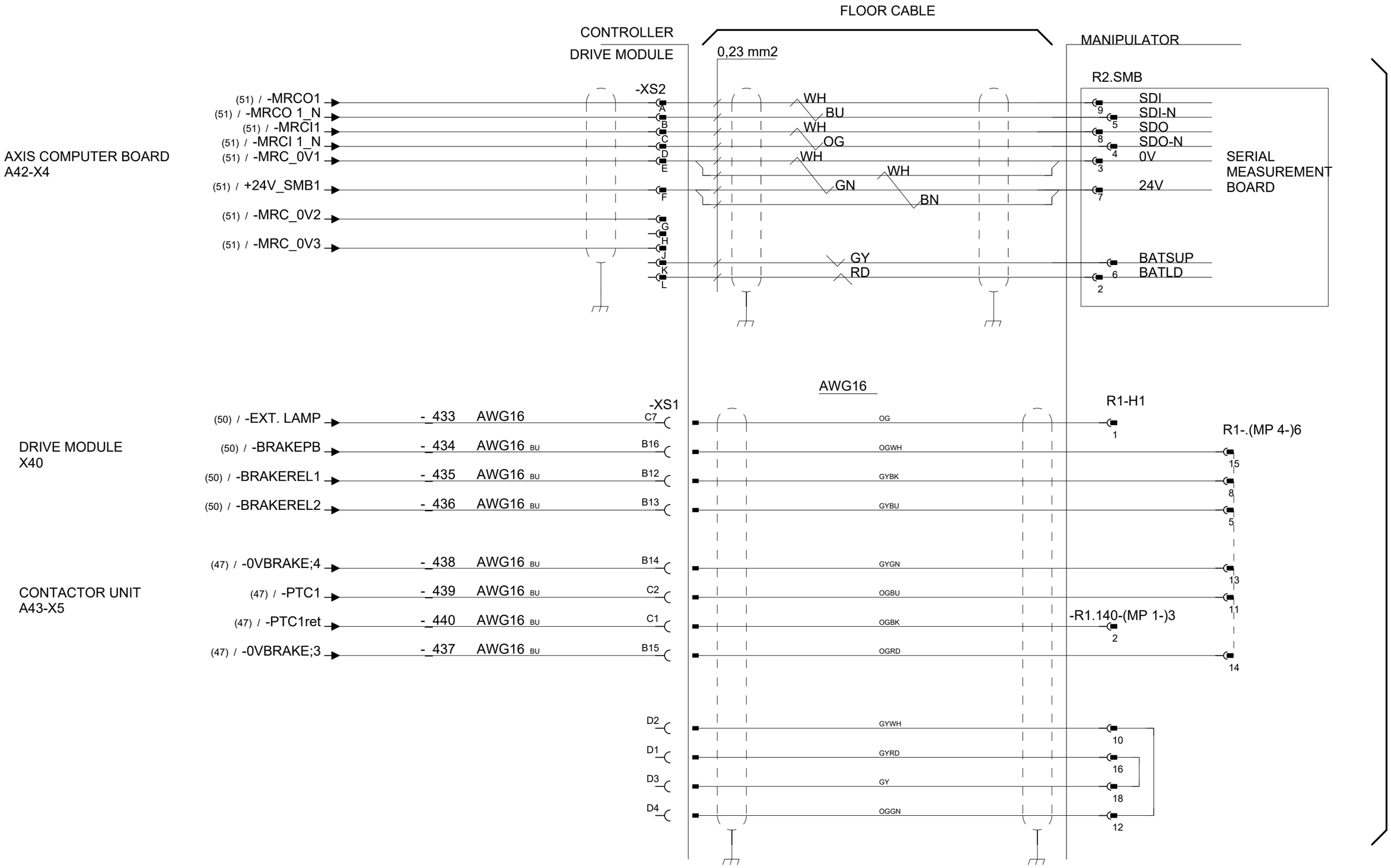

Latest revision:		Lab/Office: RA/RDP	PMC DESIGN 15 Rel: 24B CONTROL CABLE IRB 140	Status: Approved	Plant: = Location: + Sublocation: +	
				Document no. 3HAC026871-020	Rev. Ind 15	Page 59 Next 60 Total 125
Prepared by, date: A Hägglund	Approved by, date: S Hällgren 2024-03-15					

We reserve all rights in this document and in the information contained therein. Reproduction, use or disclosure to third parties without express authority is strictly forbidden. © Copyright ABB

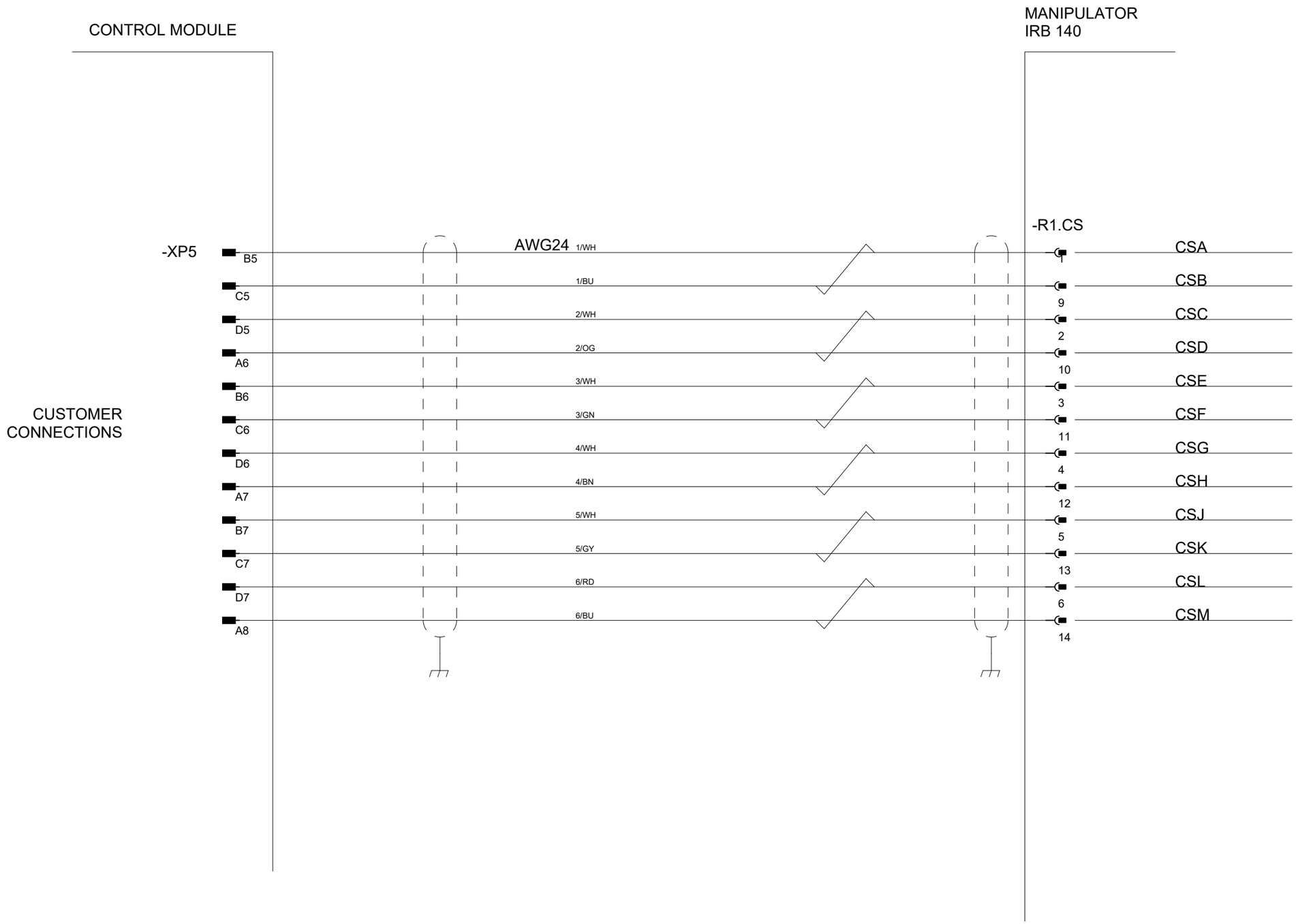

Latest revision:		ABB	Lab/Office: RA/RDP	PMC DESIGN 15 Rel: 24B CUSTOMER SIGNAL IRB 140	Status: Approved	Plant: = Location: + Sublocation: +
Prepared by, date: A Hägglund	Approved by, date: S Hällgren 2024-03-15				Document no. 3HAC026871-020	Rev. Ind 15

We reserve all rights in this document and in the information contained therein. Reproduction, use or disclosure to third parties without express authority is strictly forbidden. © Copyright ABB

IRB 260 cabinet module

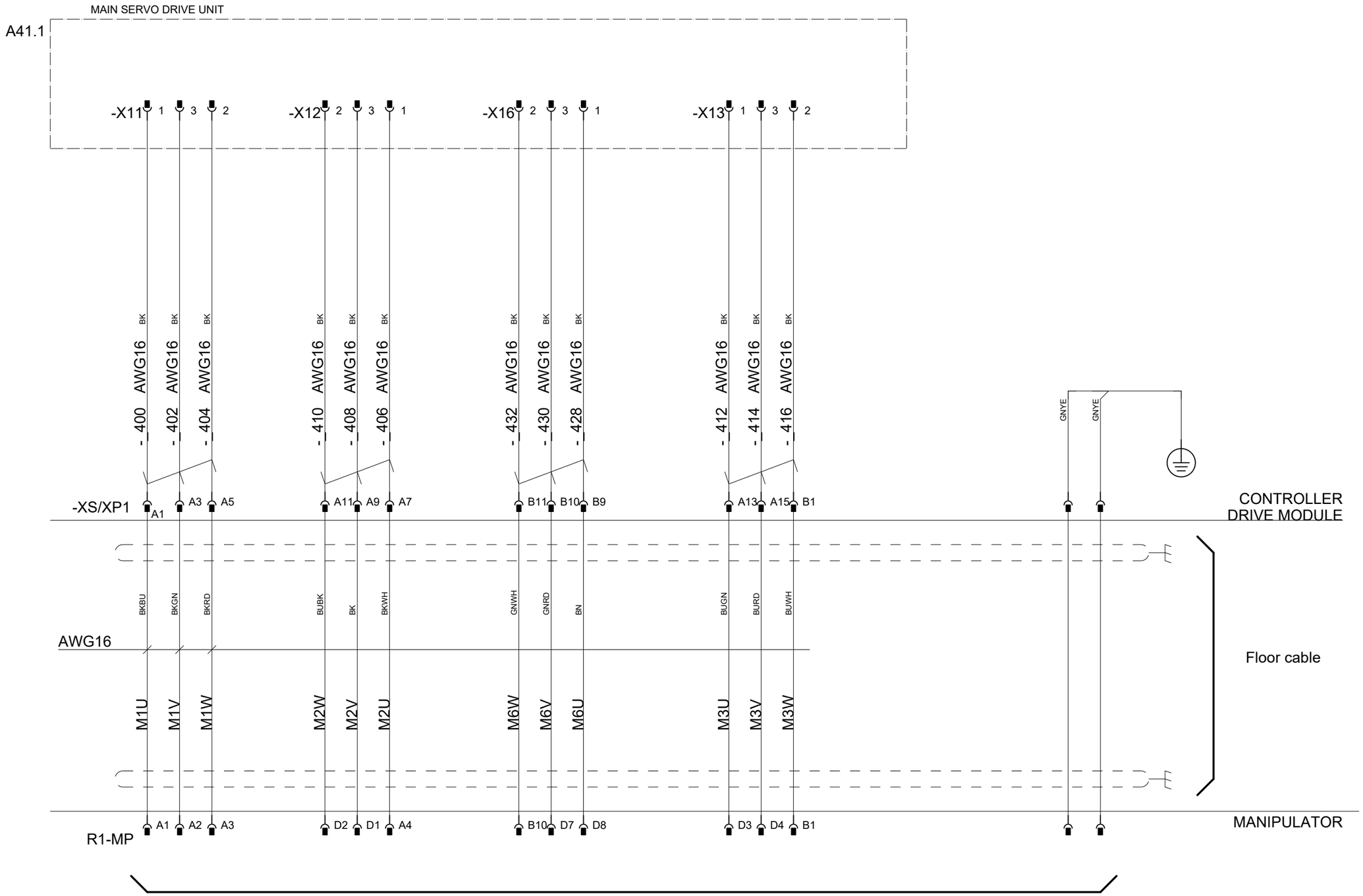

According to Manipulator circuit diagram 3HAC025611-001

Latest revision:		Lab/Office: RA/RDP	PMC DESIGN 15 Rel: 24B SERVO DRIVE UNIT IRB 260	Status: Approved	Plant: = Location: + Sublocation: +
Prepared by, date: A Hägglund	Approved by, date: S Hällgren 2024-03-15			Document no. 3HAC026871-020	Rev. Ind 15
					Page 61 Next 62 Total 125

We reserve all rights in this document and in the information contained therein. Reproduction, use or disclosure to third parties without express authority is strictly forbidden. © Copyright ABB

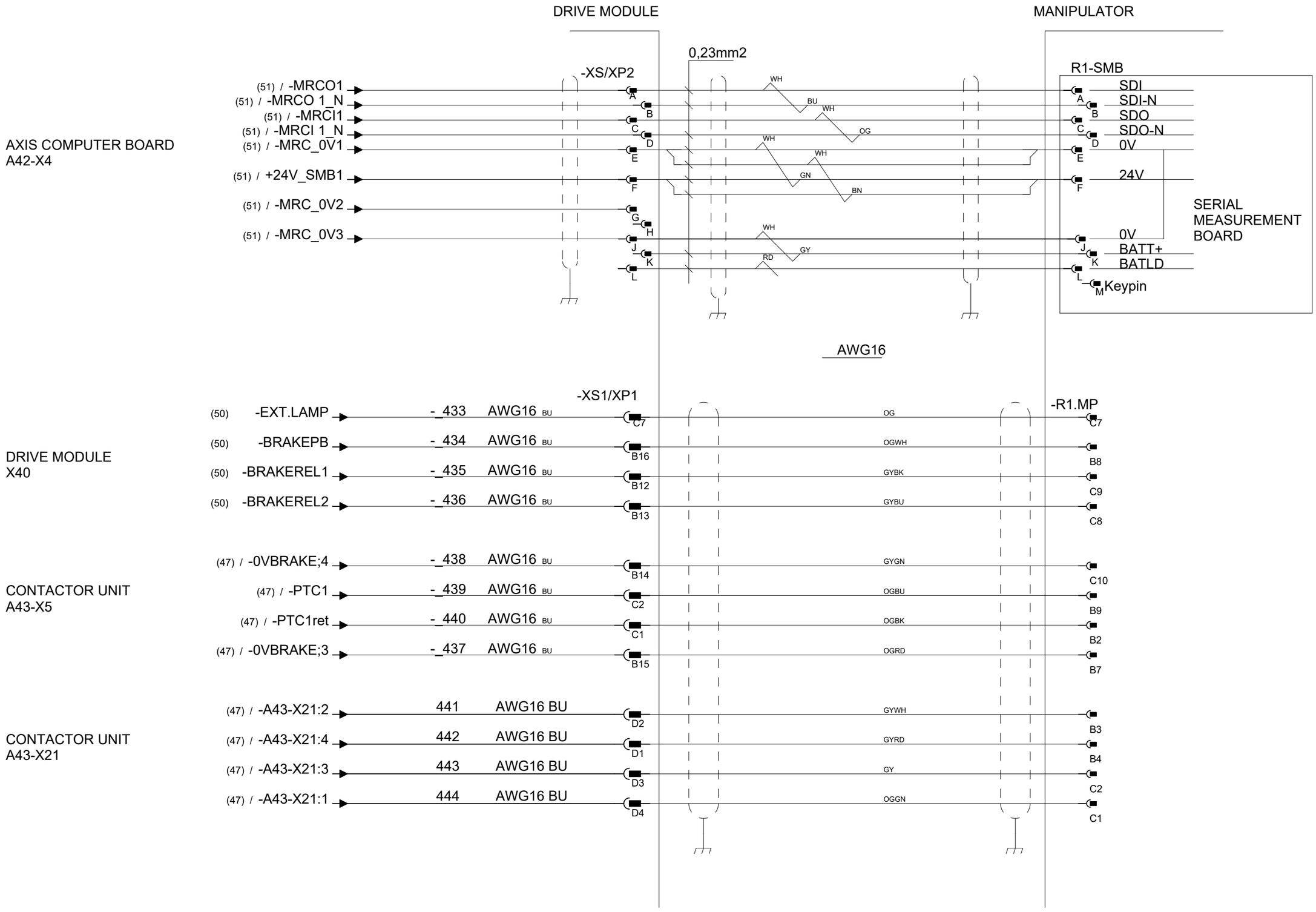

Latest revision:		Lab/Office: RA/RDP	PMC DESIGN 15 Rel: 24B CONTROL CABLE IRB 260	Status: Approved	Plant: = Location: + Sublocation: +
Prepared by, date: A Hägglund	Approved by, date: S Hällgren 2024-03-15			Document no. 3HAC026871-020	Rev. Ind 15

We reserve all rights in this document and in the information contained therein. Reproduction, use or disclosure to third parties without express authority is strictly forbidden. © Copyright ABB

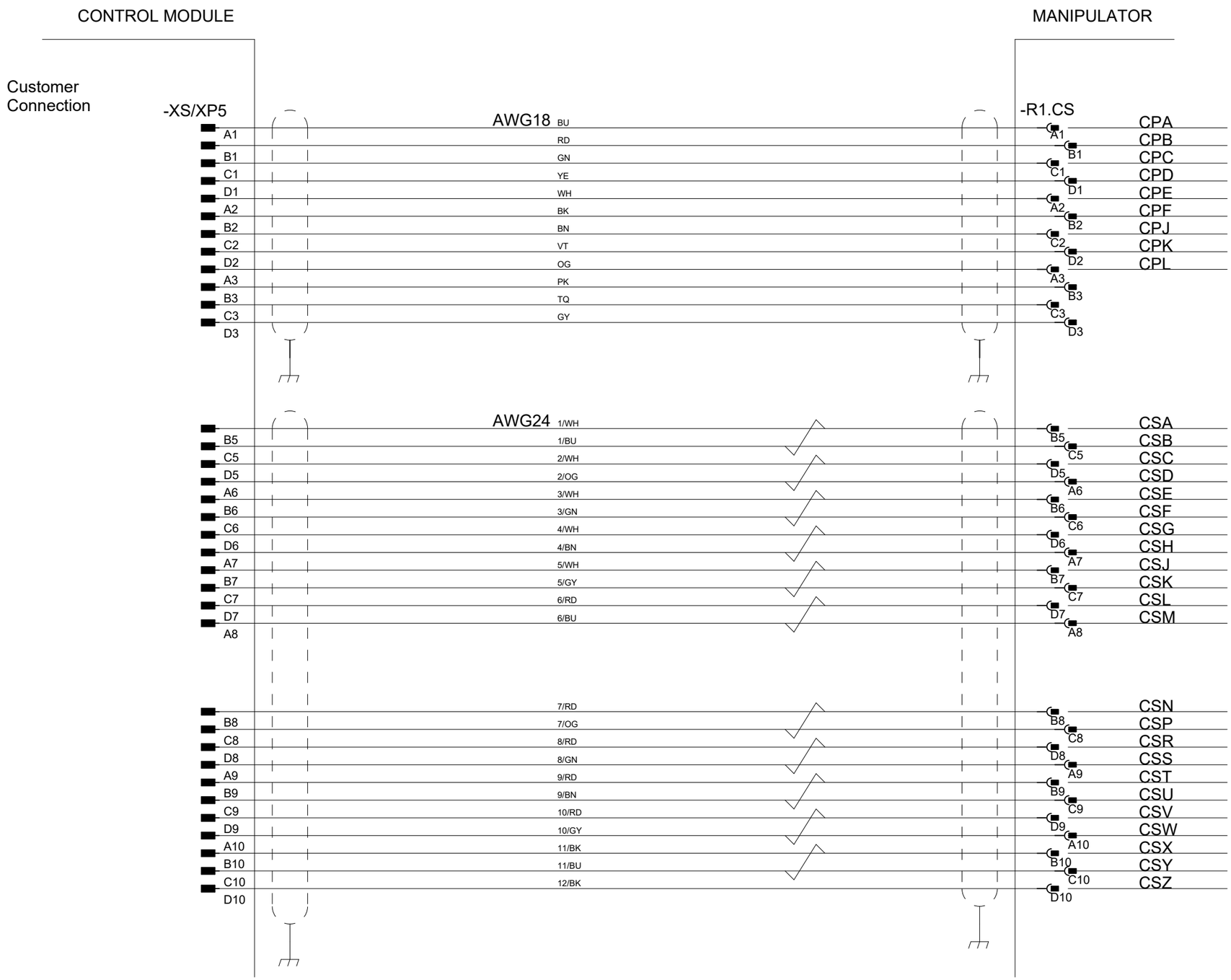

Latest revision:		ABB	Lab/Office: RA/RDP	PMC DESIGN 15 Rel: 24B CUSTOMER POWER/SIGNAL IRB 260	Status: Approved	Plant: = Location: + Sublocation: +
					Document no. 3HAC026871-020	Rev. Ind 15
Prepared by, date: A Hägglund	Approved by, date: S Hällgren 2024-03-15					Page 63 Next 64 Total 125

We reserve all rights in this document and in the information contained therein. Reproduction, use or disclosure to third parties without express authority is strictly forbidden. © Copyright ABB

IRB 360 cabinet module

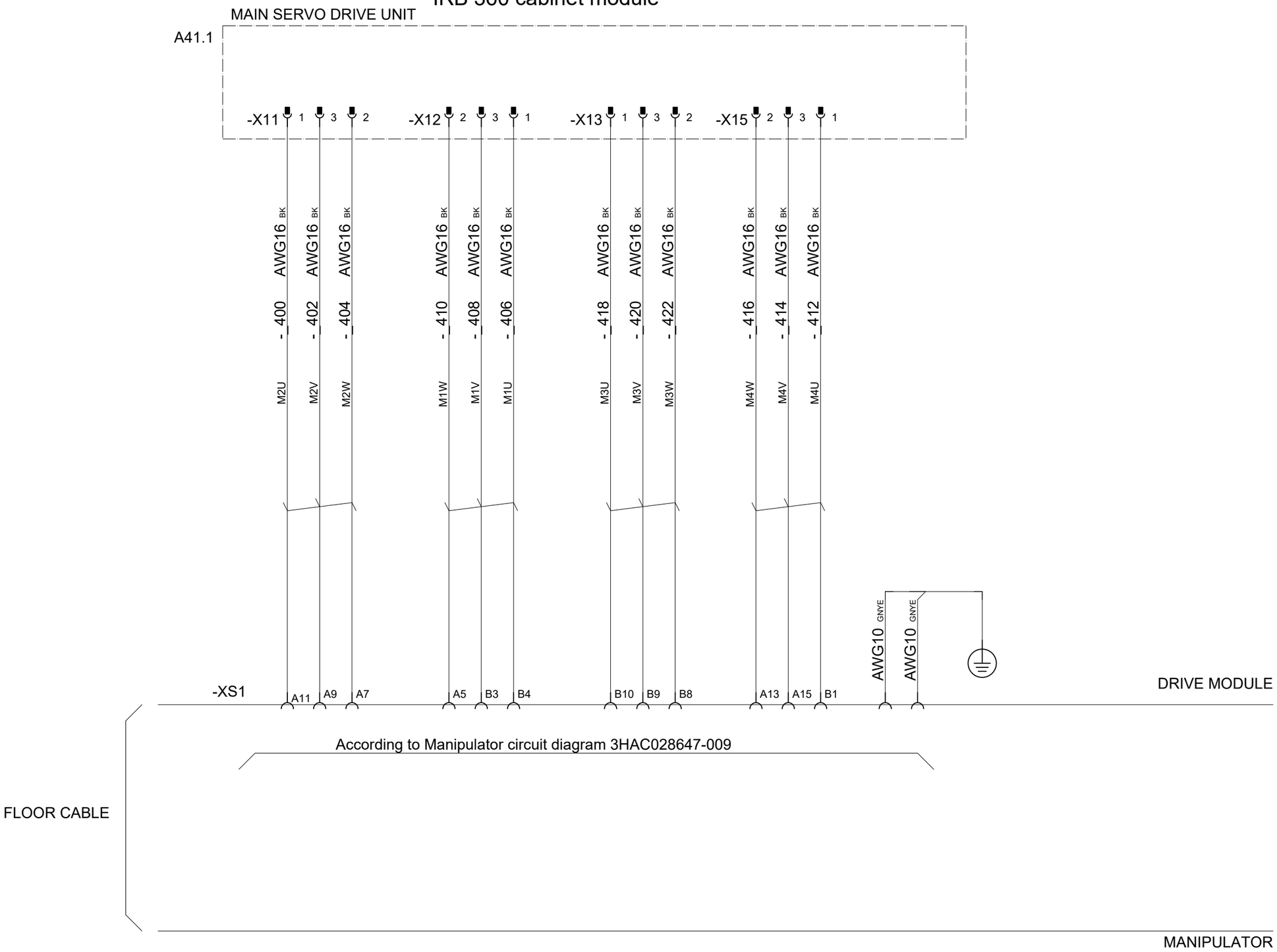

Latest revision:		ABB	Lab/Office: RA/RDP	PMC DESIGN 15 Rel: 24B SERVO DRIVE UNITS IRB 360	Status: Approved	Plant: = Location: + Sublocation: +
Prepared by, date: A Hägglund	Approved by, date: S Hällgren 2024-03-15				Document no. 3HAC026871-020	Rev. Ind 15
						Page 64 Next 65 Total 125

We reserve all rights in this document and in the information contained therein. Reproduction, use or disclosure to third parties without express authority is strictly forbidden. © Copyright ABB

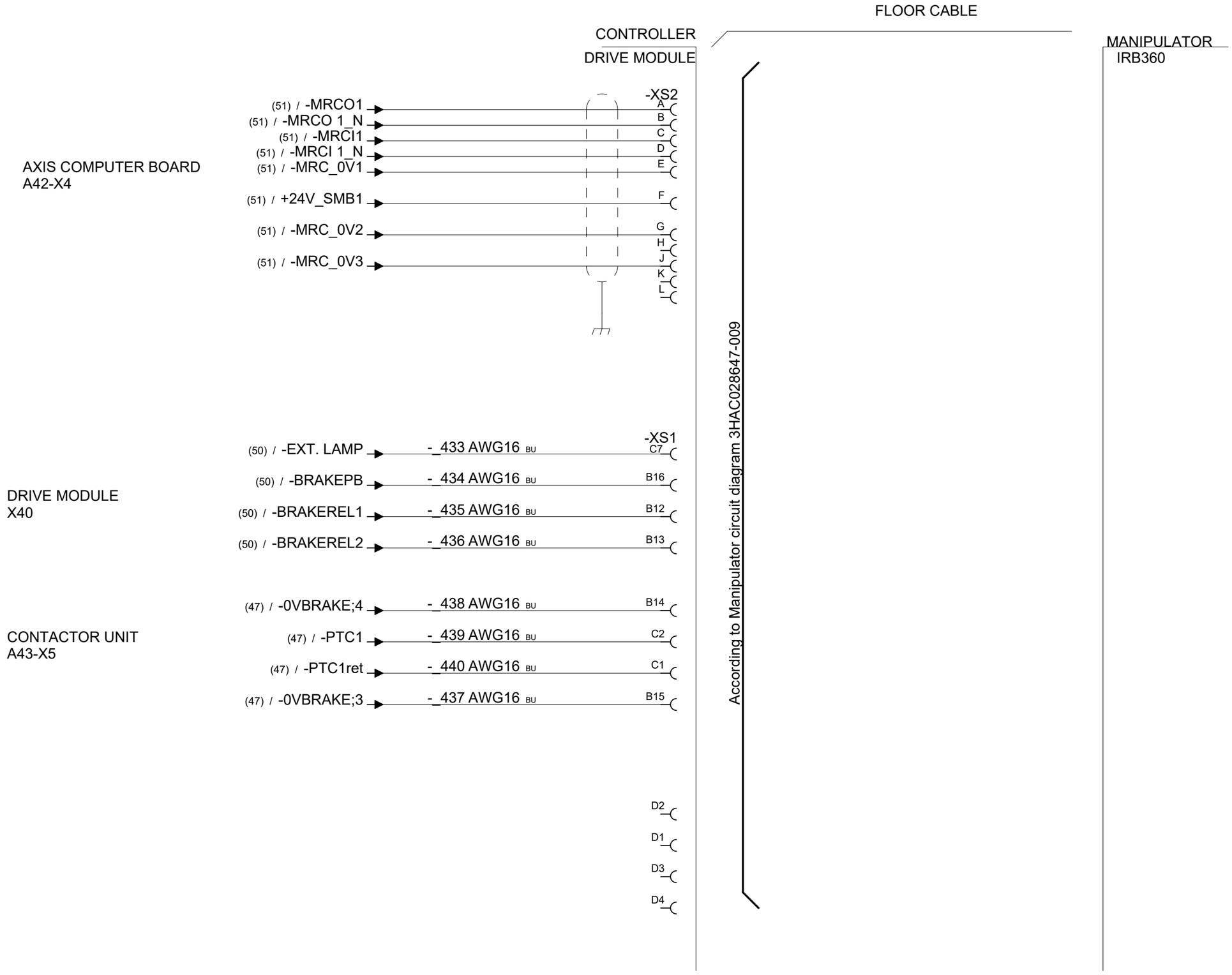

Latest revision:		ABB	Lab/Office: RA/RDP	PMC DESIGN 15 Rel: 24B CONTROL CABLE IRB 360	Status: Approved	Plant: = Location: + Sublocation: +
Prepared by, date: A Hägglund	Approved by, date: S Hällgren 2024-03-15				Document no. 3HAC026871-020	Rev. Ind 15

We reserve all rights in this document and in the information contained therein. Reproduction, use or disclosure to third parties without express authority is strictly forbidden. © Copyright ABB

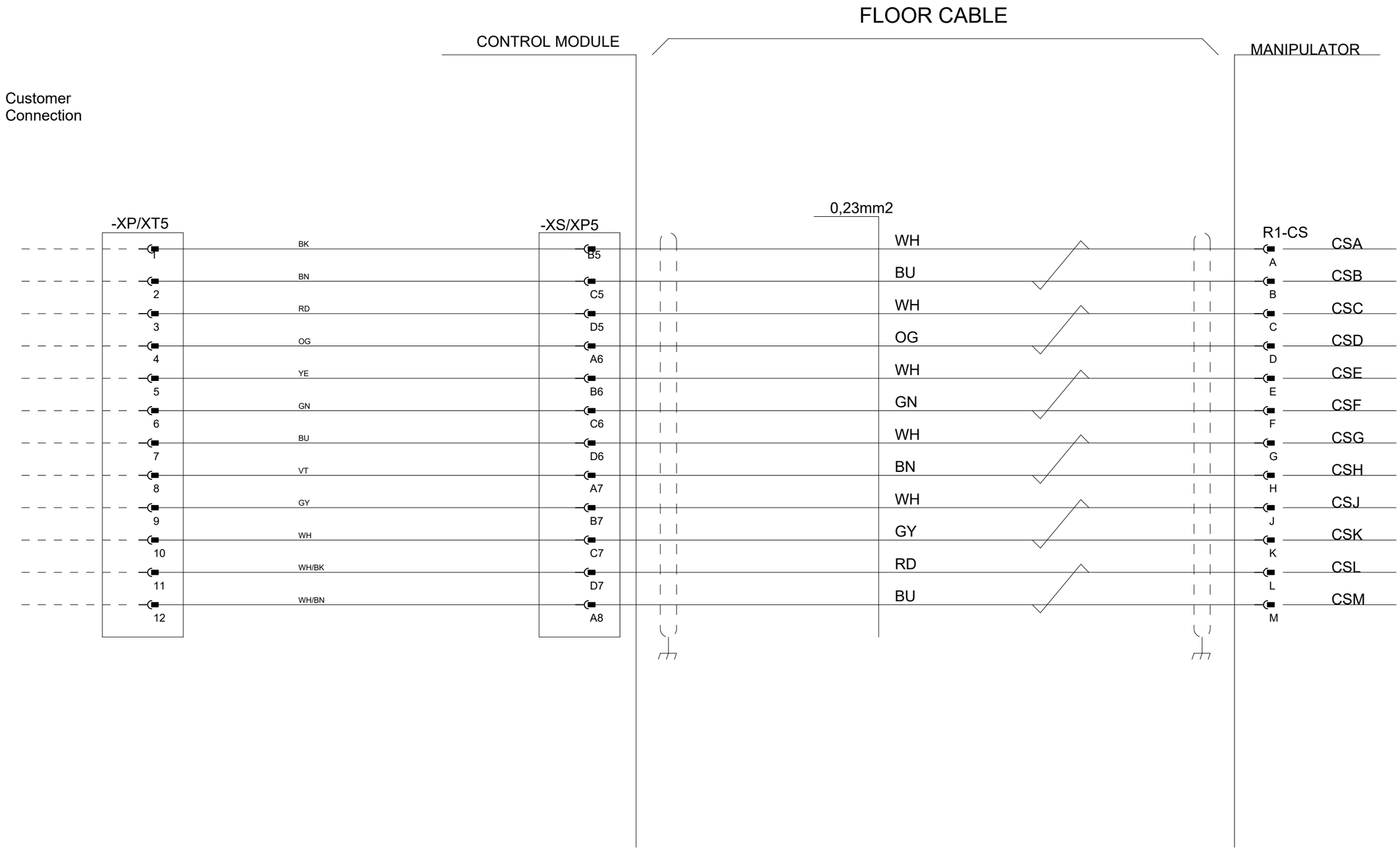

According to Manipulator circuit diagram 3HAC028647-009

Latest revision:		ABB	Lab/Office: RA/RDP	PMC DESIGN 15 Rel: 24B CUSTOMER SIGNAL IRB 360	Status: Approved	Plant: = Location: + Sublocation: +
Prepared by, date: A Hägglund	Approved by, date: S Hällgren 2024-03-15				Document no. 3HAC026871-020	Rev. Ind 15

We reserve all rights in this document and in the information contained therein. Reproduction, use or disclosure to third parties without express authority is strictly forbidden. © Copyright ABB

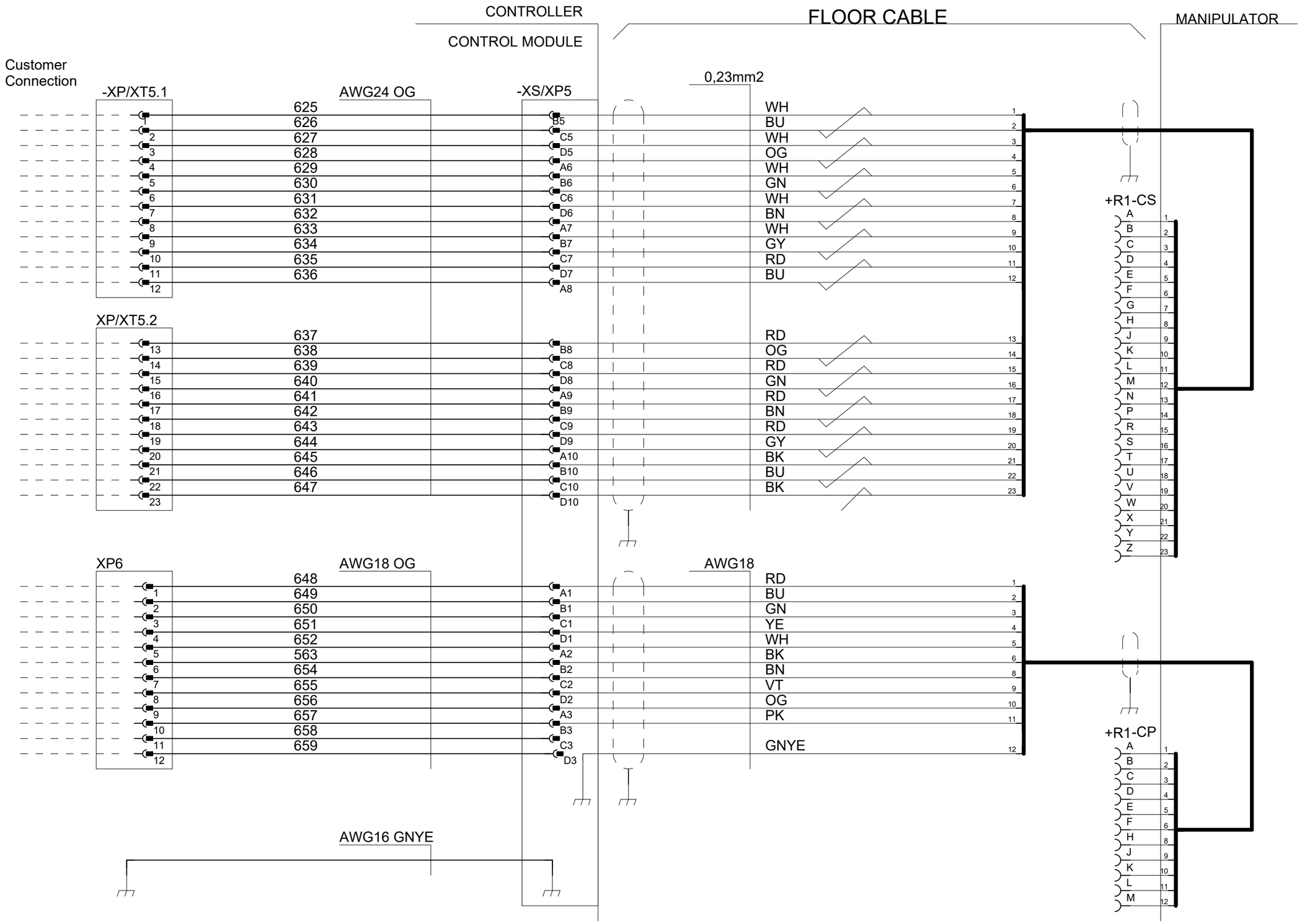

Latest revision:		ABB	Lab/Office: RA/RDP	PMC DESIGN 15 Rel: 24B CUSTOMER POWER/SIGNAL SINGLE CABINET IRB 360	Status: Approved	Plant: = Location: + Sublocation: +
Prepared by, date: A Hägglund	Approved by, date: S Hällgren 2024-03-15				Document no. 3HAC026871-020	Rev. Ind 15
						Page 66.1 Next 67 Total 125

We reserve all rights in this document and in the information contained therein. Reproduction, use or disclosure to third parties without express authority is strictly forbidden. © Copyright ABB

IRB 460 cabinet module

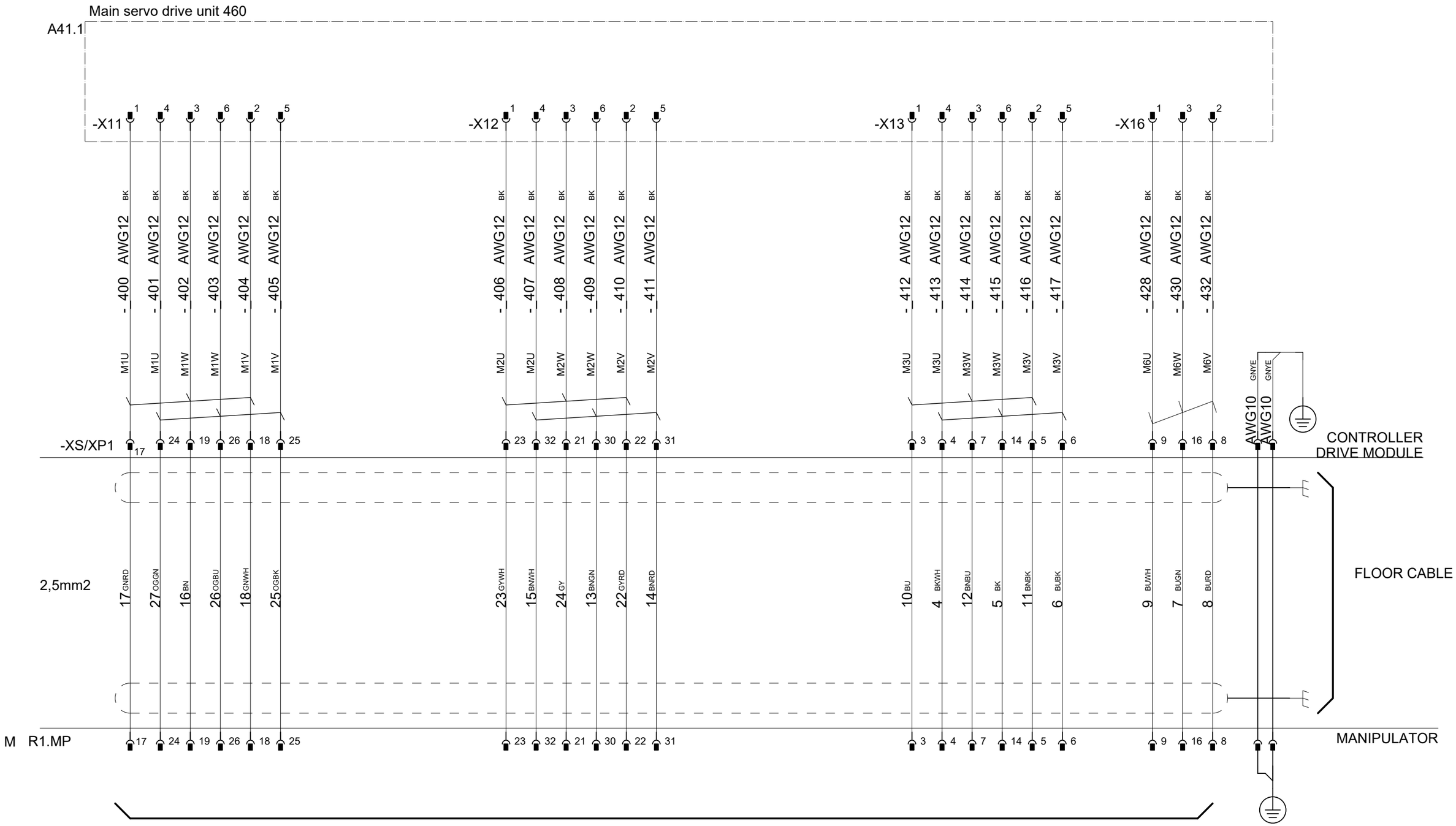

According to Manipulator circuit diagram 3HAC036446-005

Latest revision:		Lab/Office: RA/RDP	PMC DESIGN 15 Rel: 24B SERVO DRIVE SYSTEM IRB 460	Status: Approved	Plant: = Location: + Sublocation: +
				Document no. 3HAC026871-020	Rev. Ind 15
Prepared by, date: A Hägglund	Approved by, date: S Hällgren 2024-03-15				Page 67 Next 68 Total 125

We reserve all rights in this document and in the information contained therein. Reproduction, use or disclosure to third parties without express authority is strictly forbidden. © Copyright ABB

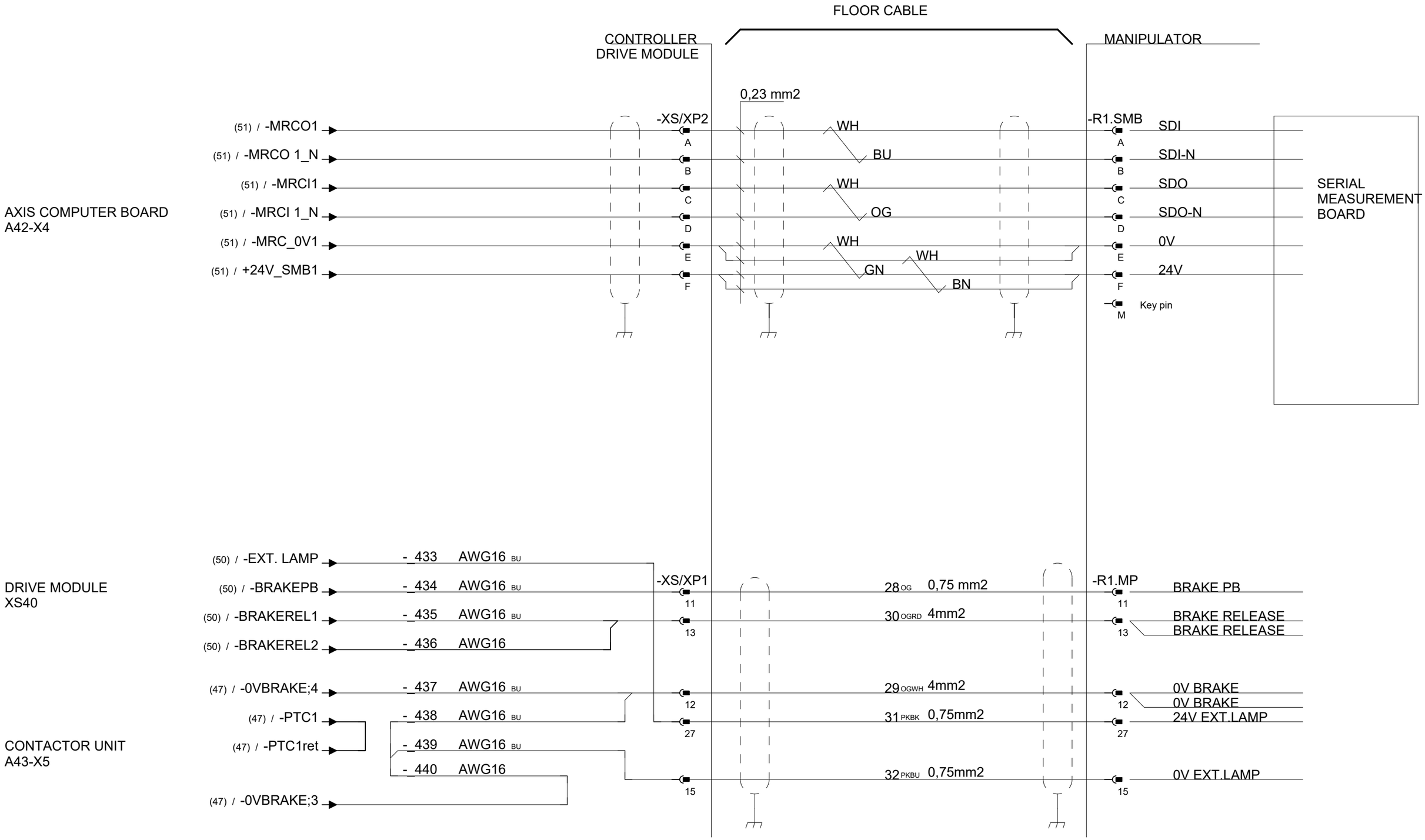

Latest revision:		Lab/Office: RA/RDP	PMC DESIGN 15 Rel: 24B CONTROL CABLE IRB 460	Status: Approved	Plant: = Location: + Sublocation: +
Prepared by, date: A Hägglund	Approved by, date: S Hällgren 2024-03-15			Document no. 3HAC026871-020	Rev. Ind 15

We reserve all rights in this document and in the information contained therein. Reproduction, use or disclosure to third parties without express authority is strictly forbidden. © Copyright ABB

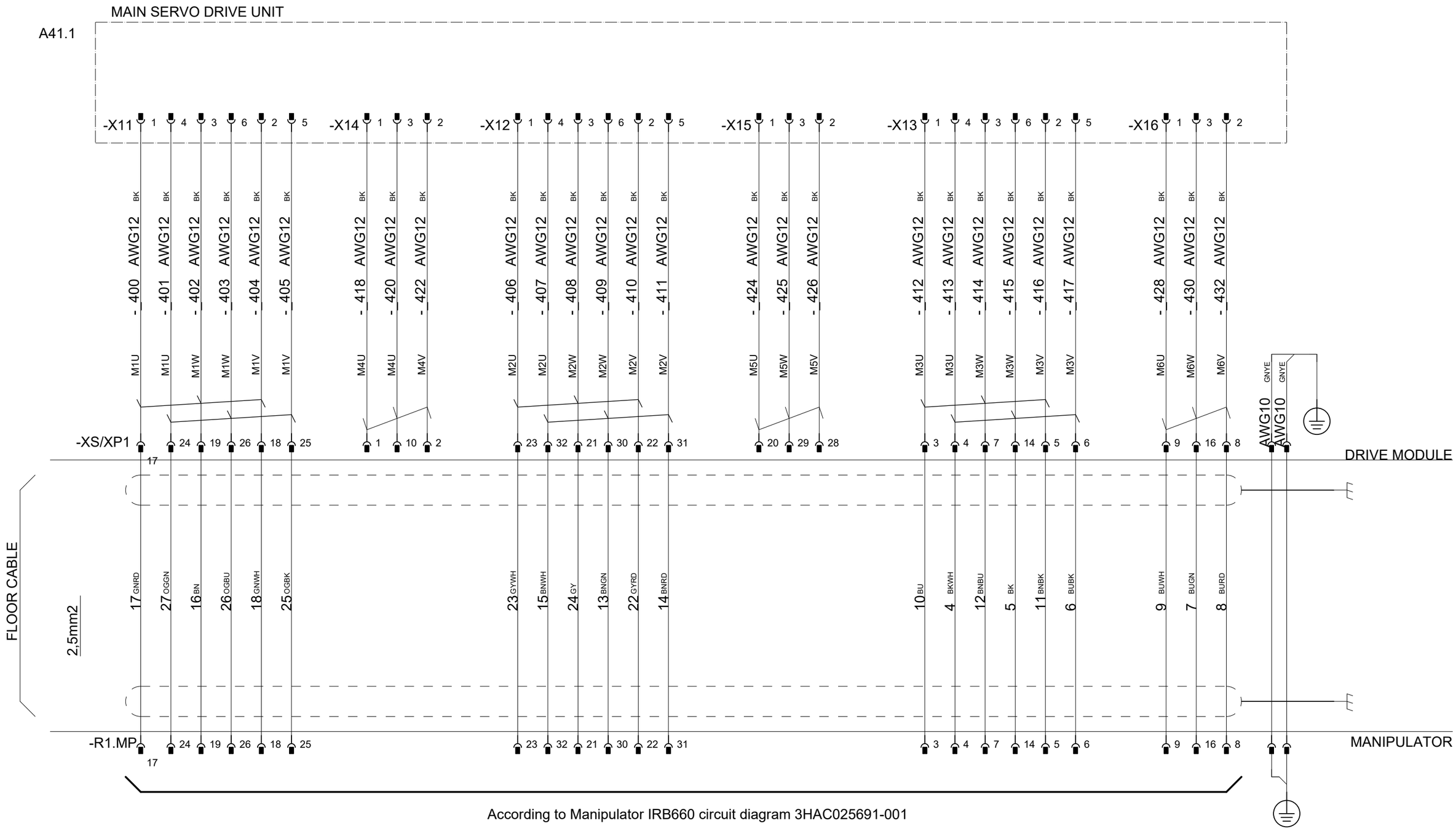

Latest revision:		Lab/Office: RA/RDP	PMC DESIGN 15 Rel: 24B SERVO DRIVE SYSTEM IRB 660, 760	Status: Approved	Plant: = Location: + Sublocation: +
Prepared by, date: A Hägglund	Approved by, date: S Hällgren 2024-03-15			Document no. 3HAC026871-020	Rev. Ind 15
					Page 69 Next 70 Total 125

We reserve all rights in this document and in the information contained therein. Reproduction, use or disclosure to third parties without express authority is strictly forbidden. © Copyright ABB

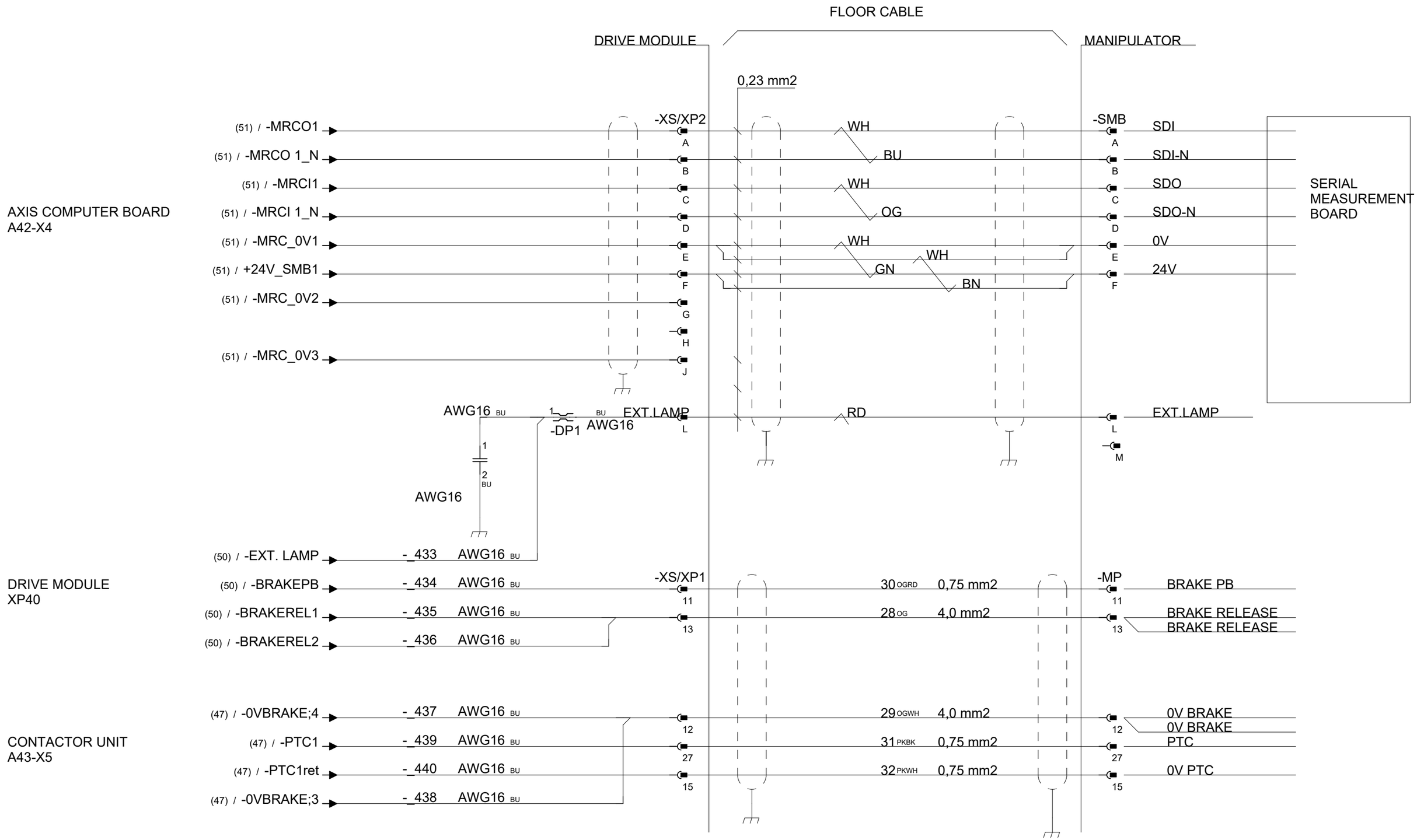

Latest revision:		Lab/Office: RA/RDP	PMC DESIGN 15 Rel: 24B CONTROL CABLE IRB 660, 760	Status: Approved	Plant: = Location: + Sublocation: +
				Document no. 3HAC026871-020	Rev. Ind 15
					Page 70 Next 71 Total 125
Prepared by, date: A Hägglund	Approved by, date: S Hällgren 2024-03-15				

We reserve all rights in this document and in the information contained therein. Reproduction, use or disclosure to third parties without express authority is strictly forbidden. © Copyright ABB

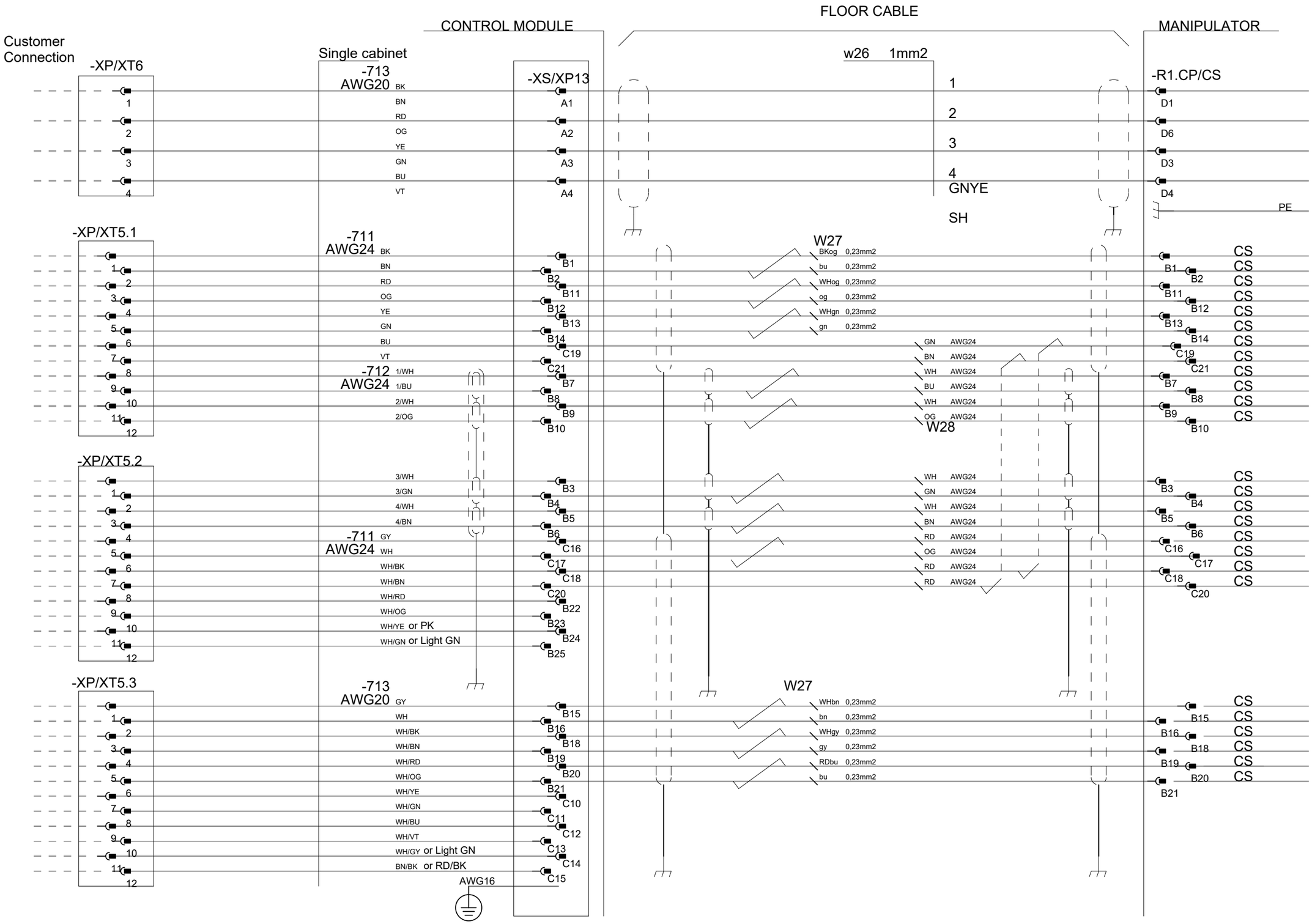

Latest revision:		Lab/Office: RA/RDP	PMC DESIGN 15 Rel: 24B CUSTOMER POWER/SIGNAL IRB460, 660, 760	Status: Approved	Plant: = Location: + Sublocation: +
Prepared by, date: A Hägglund	Approved by, date: S Hällgren 2024-03-15			Document no. 3HAC026871-020	Rev. Ind 15

We reserve all rights in this document and in the information contained therein. Reproduction, use or disclosure to third parties without express authority is strictly forbidden. © Copyright ABB

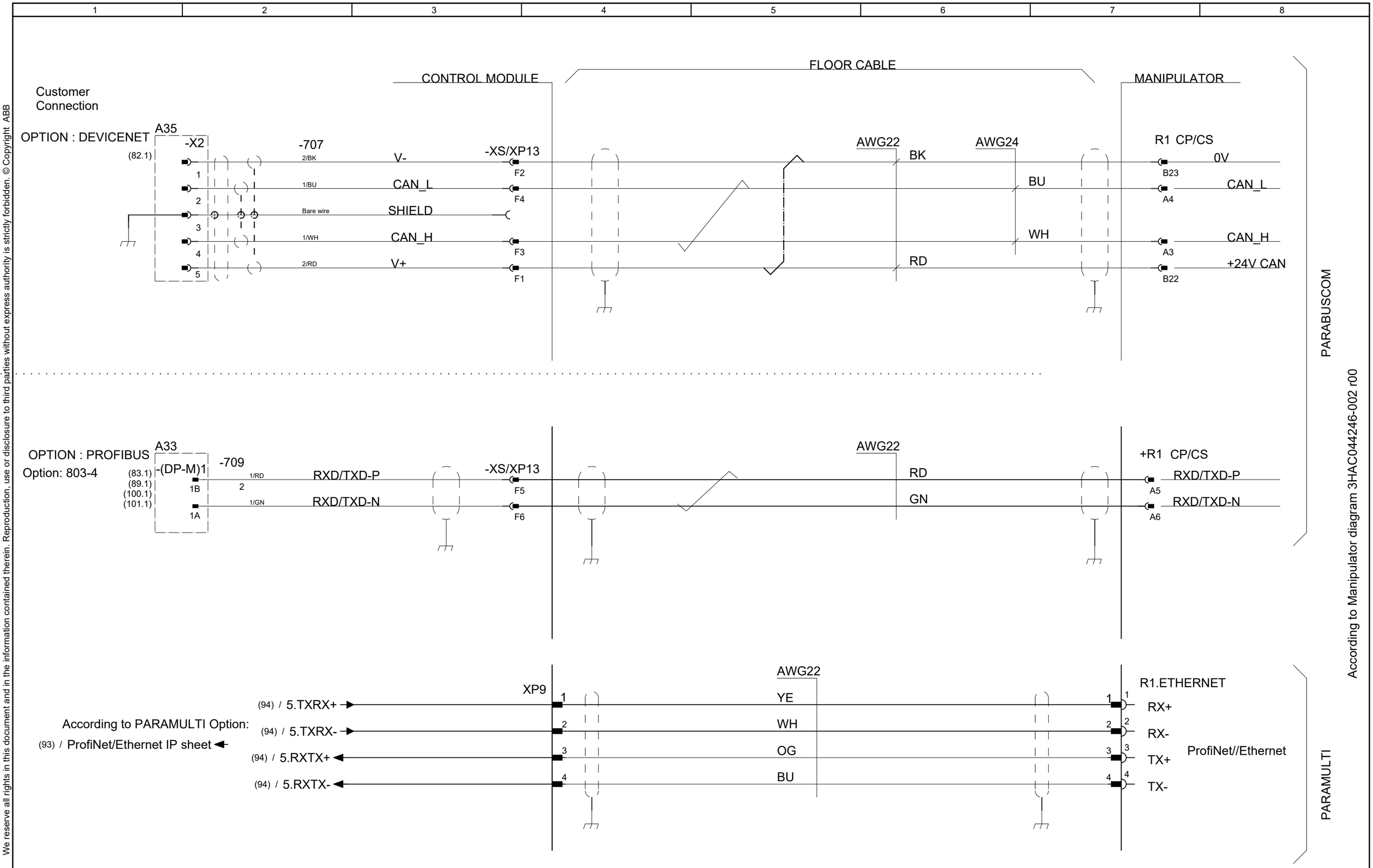

Latest revision:		Lab/Office: RA/RDP	PMC DESIGN 15 Rel: 24B CAN, PROf-bus,CP/CS,Profinet IRB460, 660, 760	Status: Approved	Plant: = Location: + Sublocation: +
Prepared by, date: A Hägglund	Approved by, date: S Hällgren 2024-03-15			Document no. 3HAC026871-020	Rev. Ind 15
					Page 72 Next 72.1 Total 125

We reserve all rights in this document and in the information contained therein. Reproduction, use or disclosure to third parties without express authority is strictly forbidden. © Copyright ABB

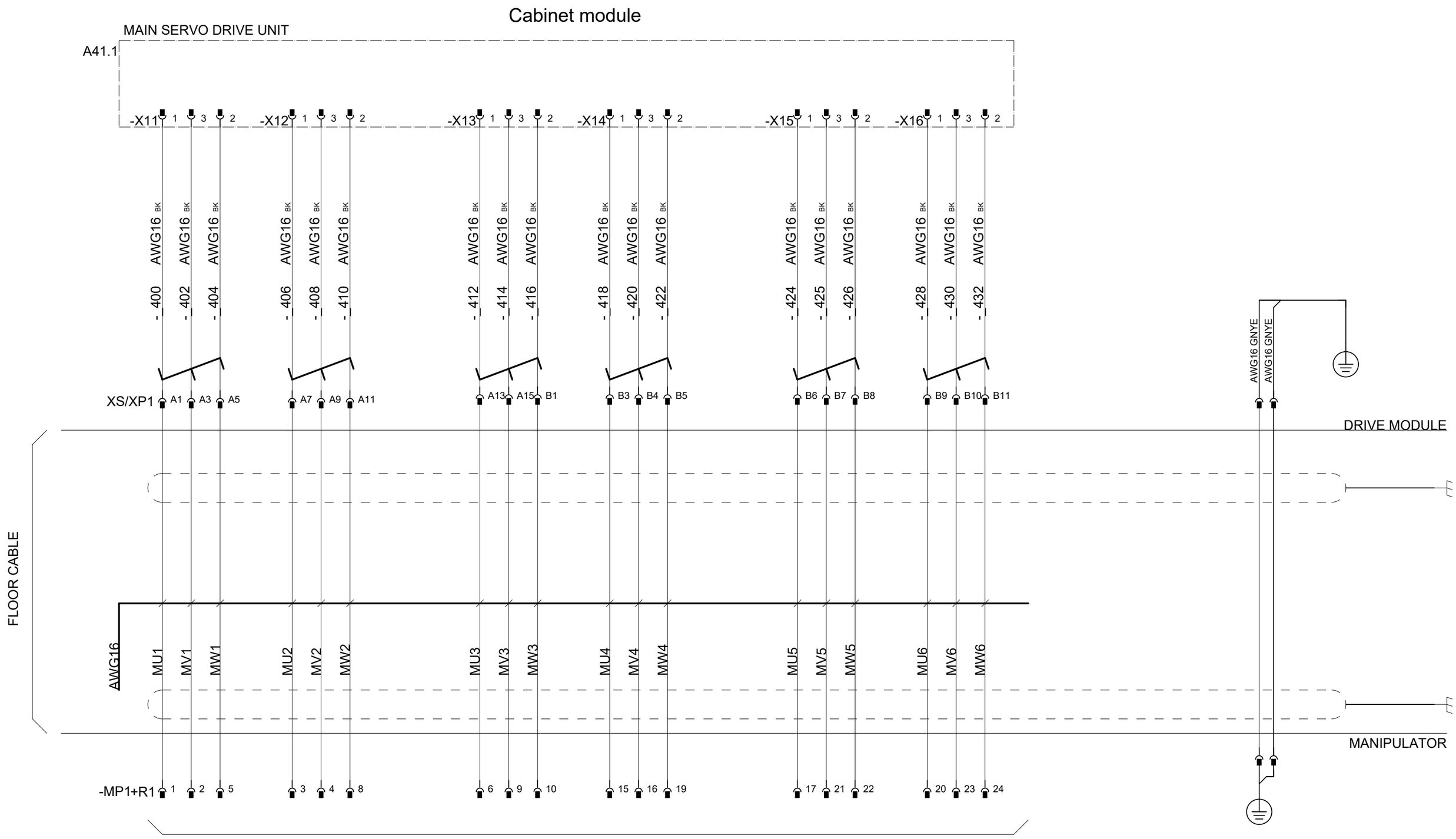

According to Manipulator circuit diagram 3HAC046307-003

Latest revision:		ABB	Lab/Office: RA/RDP	PMC DESIGN 15 Rel: 24B SERVO DRIVE SYSTEM IRB 1200	Status: Approved	Plant: = Location: + Sublocation: +
Prepared by, date: A Hägglund	Approved by, date: S Hällgren 2024-03-15				Document no. 3HAC026871-020	Rev. Ind 15
						Page 72.1 Next 72.2 Total 125

We reserve all rights in this document and in the information contained therein. Reproduction, use or disclosure to third parties without express authority is strictly forbidden. © Copyright ABB

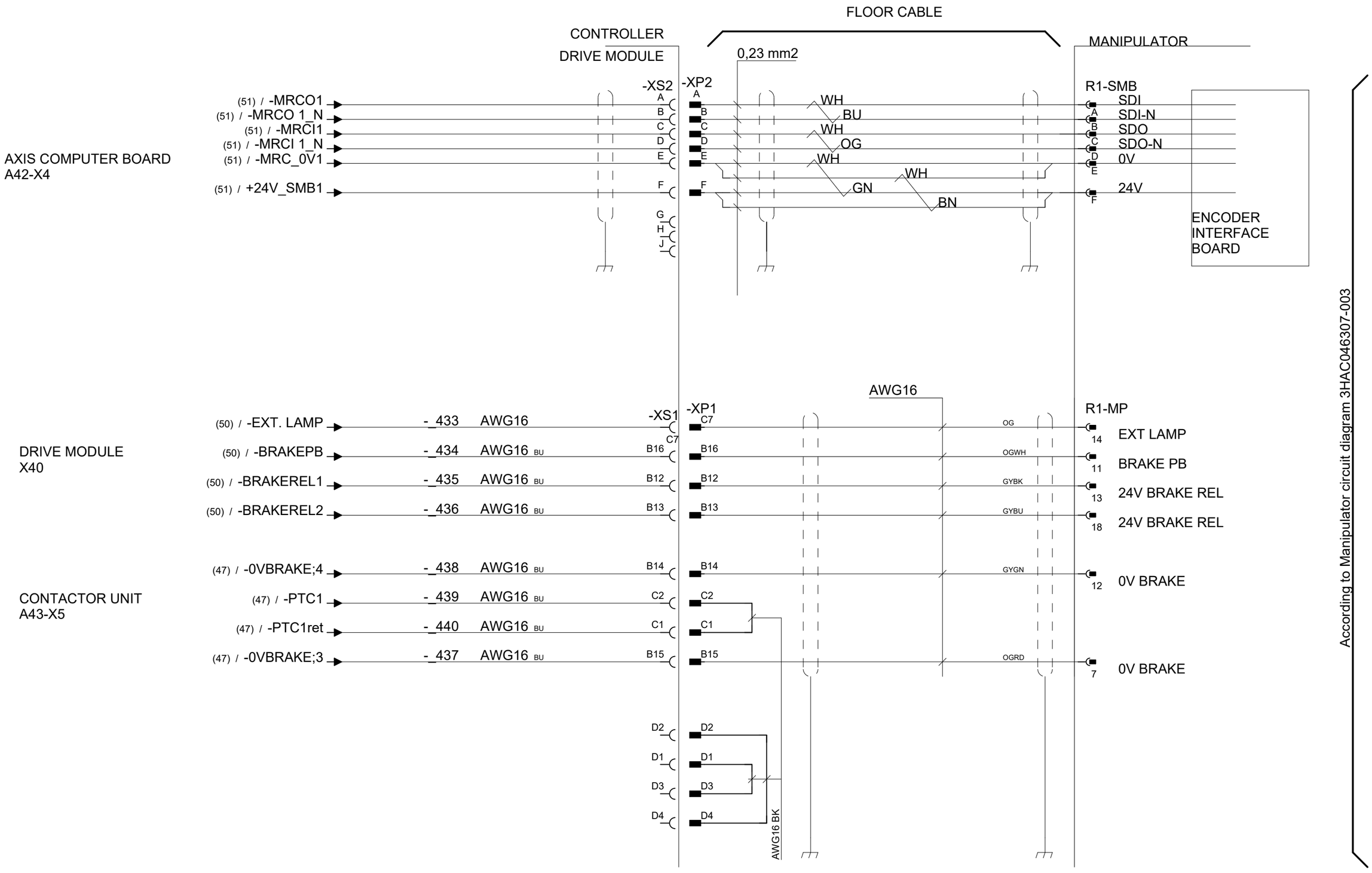

Latest revision:		Lab/Office: RA/RDP	PMC DESIGN 15 Rel: 24B CONTROL CABLE IRB 1200	Status: Approved	Plant: = Location: + Sublocation: +	
				Document no. 3HAC026871-020	Rev. Ind 15	Page 72.2 Next 72.3 Total 125
Prepared by, date: A Hägglund	Approved by, date: S Hällgren 2024-03-15					

We reserve all rights in this document and in the information contained therein. Reproduction, use or disclosure to third parties without express authority is strictly forbidden. © Copyright ABB

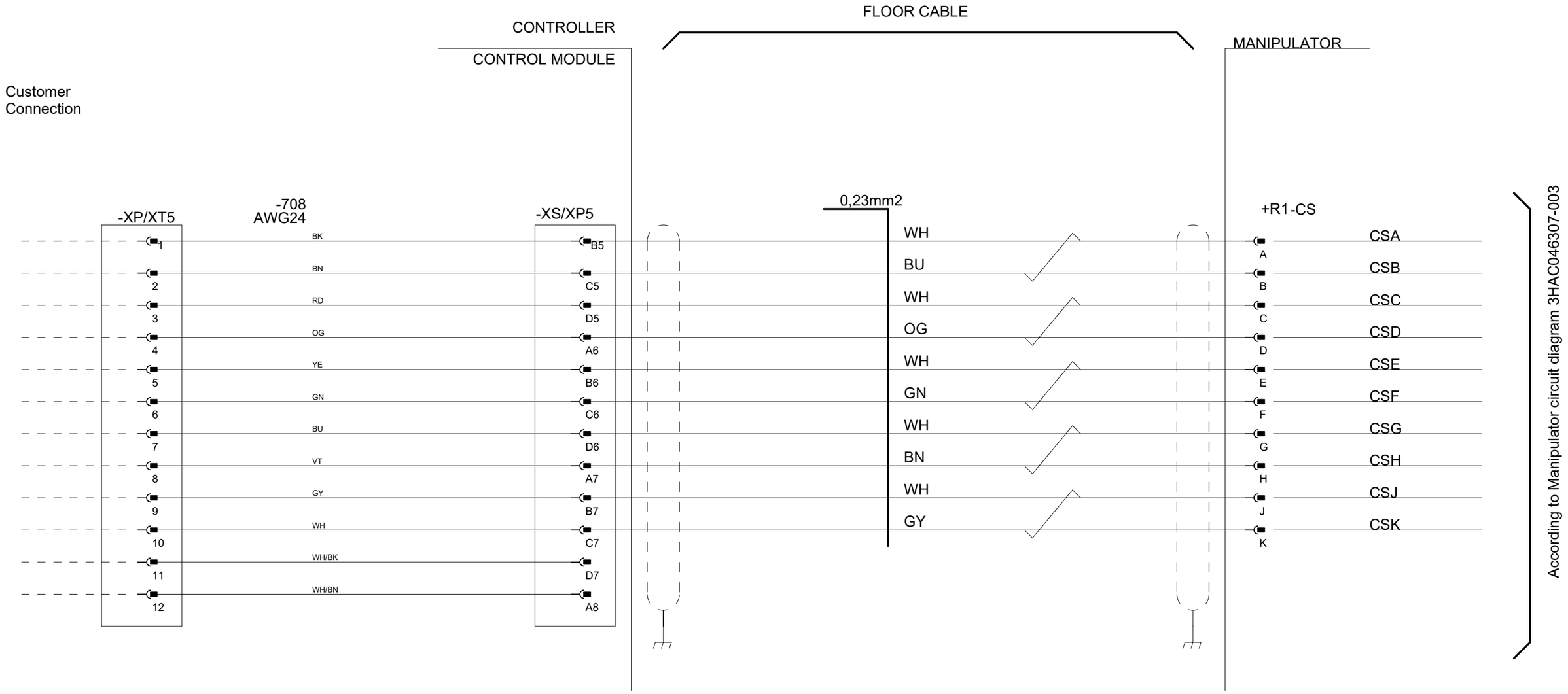

Latest revision:		ABB Lab/Office: RA/RDP	PMC DESIGN 15 Rel: 24B CUSTOMER SIGNAL SINGLE CABINET IRB 1200	Status: Approved	Plant: = Location: + Sublocation: +	
Prepared by, date: A Hägglund	Approved by, date: S Hällgren 2024-03-15			Document no. 3HAC026871-020	Rev. Ind 15	Page 72.3 Next 73 Total 125

We reserve all rights in this document and in the information contained therein. Reproduction, use or disclosure to third parties without express authority is strictly forbidden. © Copyright ABB

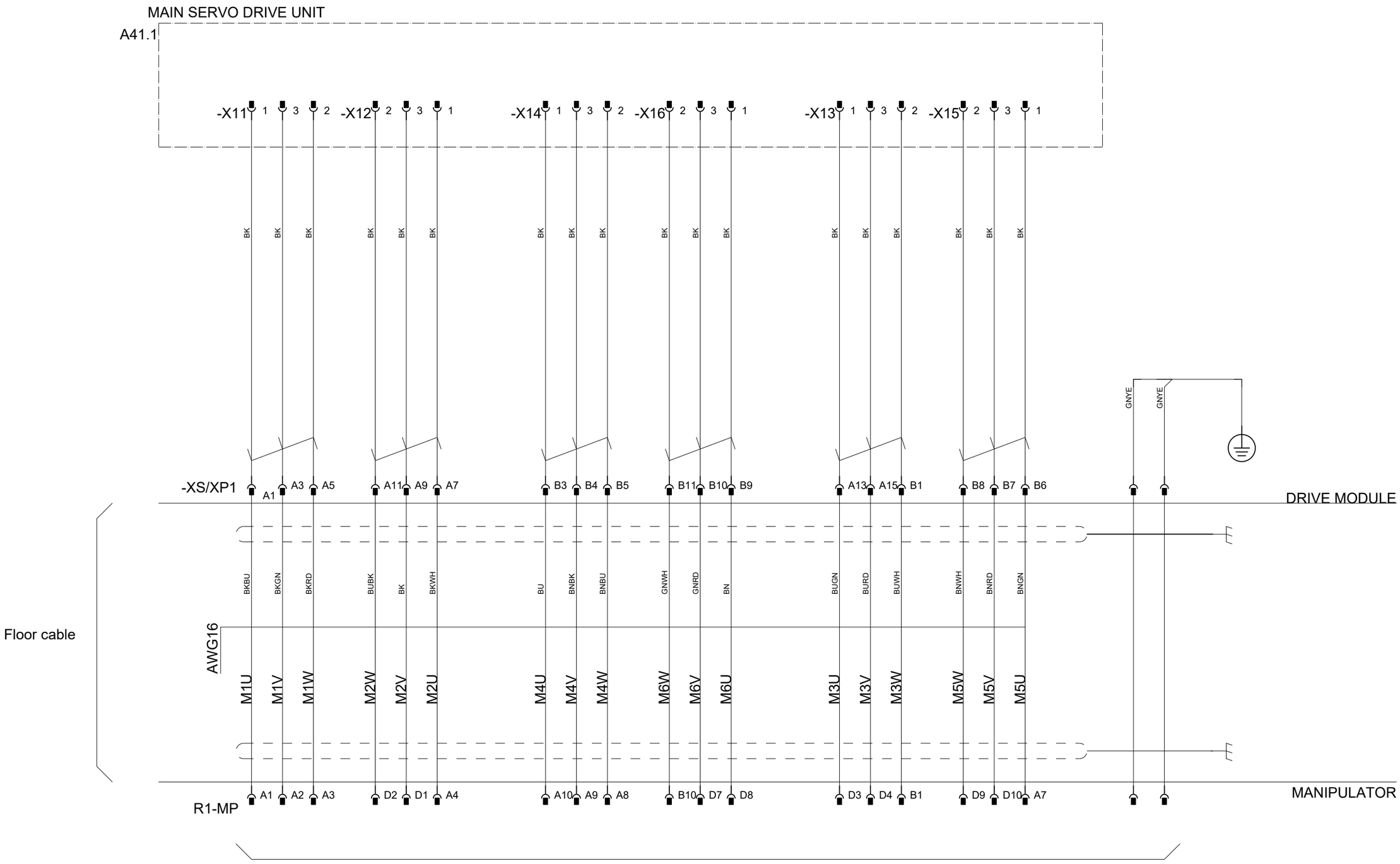

According to Manipulator circuit diagram 3HAC021351-003

Latest revision:		ABB	Lab/Office: RA/RDP	PMC DESIGN 15 Rel: 24B SERVO DRIVE UNIT IRB 1600/1660	Status: Approved	Plant: = Location: + Sublocation: +
Prepared by, date: A Hägglund	Approved by, date: S Hällgren 2024-03-15				Document no. 3HAC026871-020	Rev. Ind 15

We reserve all rights in this document and in the information contained therein. Reproduction, use or disclosure to third parties without express authority is strictly forbidden. © Copyright ABB

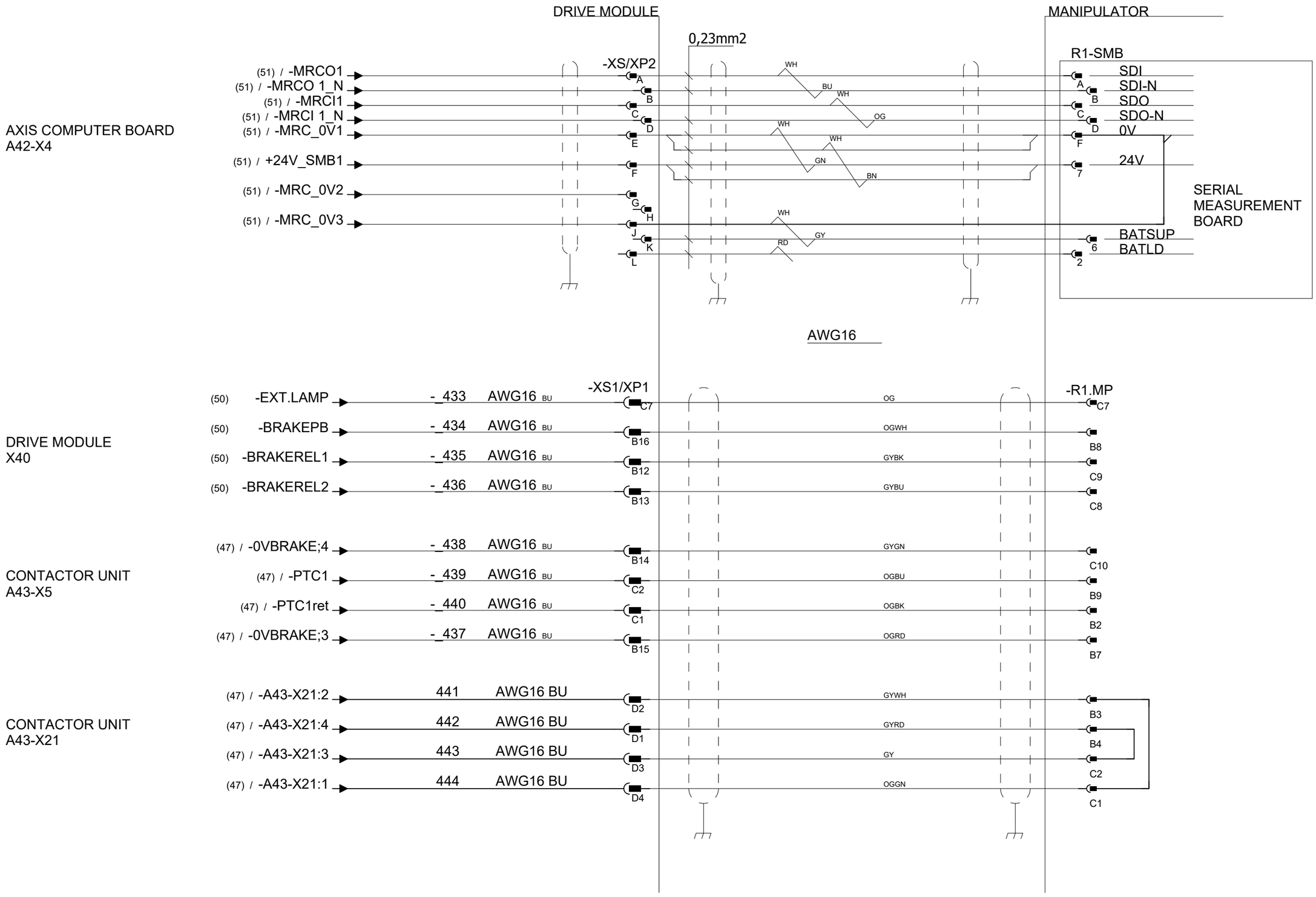

Latest revision:		Lab/Office: RA/RDP	PMC DESIGN 15 Rel: 24B CONTROL CABLE IRB 1600/1660	Status: Approved	Plant: = Location: + Sublocation: +
				Document no. 3HAC026871-020	Rev. Ind 15
					Page 74 Next 75 Total 125
Prepared by, date: A Hägglund	Approved by, date: S Hällgren 2024-03-15				

We reserve all rights in this document and in the information contained therein. Reproduction, use or disclosure to third parties without express authority is strictly forbidden. © Copyright ABB

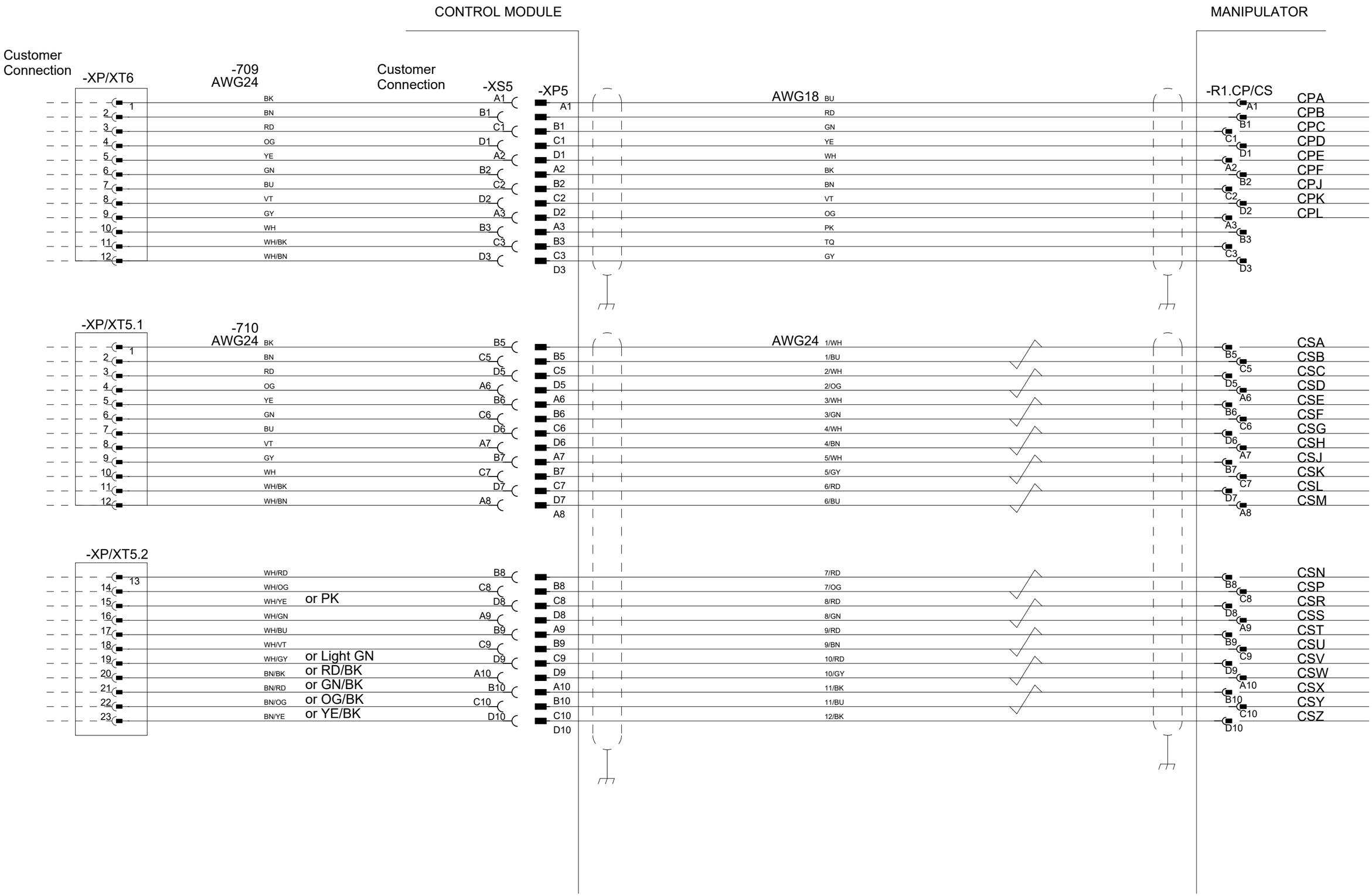

Latest revision:		ABB	Lab/Office: RA/RDP	PMC DESIGN 15 Rel: 24B CUSTOMER POWER/SIGNAL IRB 1600/1660	Status: Approved	Plant: = Location: + Sublocation: +
Prepared by, date: A Hägglund	Approved by, date: S Hällgren 2024-03-15				Document no. 3HAC026871-020	Rev. Ind 15

We reserve all rights in this document and in the information contained therein. Reproduction, use or disclosure to third parties without express authority is strictly forbidden. © Copyright ABB

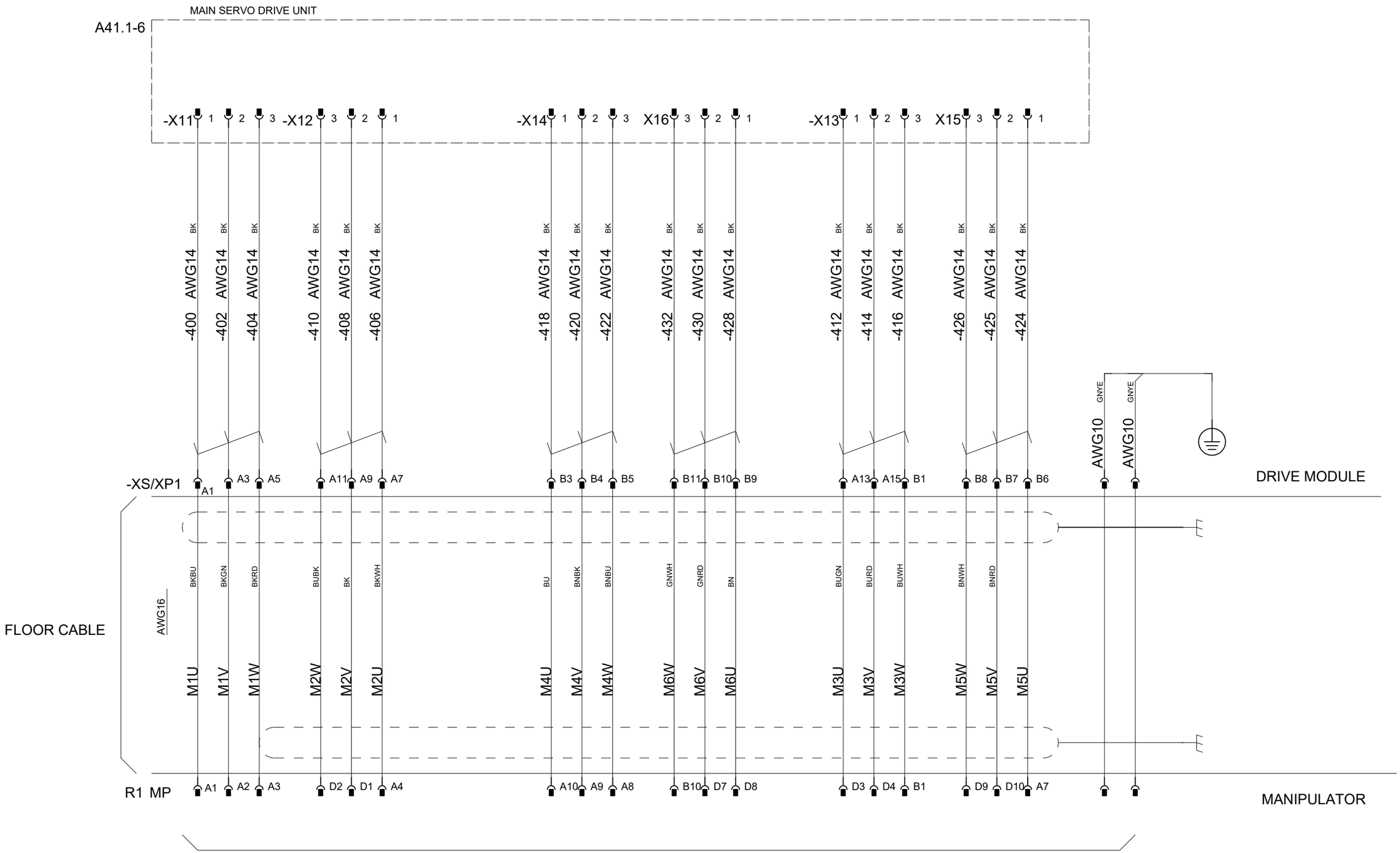

According to Manipulator circuit diagram 3HAC6670-3

Latest revision:		Lab/Office: RA/RDP	PMC DESIGN 15 Rel: 24B SERVO DRIVE UNIT IRB 2400	Status: Approved	Plant: = Location: + Sublocation: +
				Document no. 3HAC026871-020	Rev. Ind 15
					Page 76 Next 77 Total 125
Prepared by, date: A Hägglund	Approved by, date: S Hällgren 2024-03-15				

We reserve all rights in this document and in the information contained therein. Reproduction, use or disclosure to third parties without express authority is strictly forbidden. © Copyright ABB

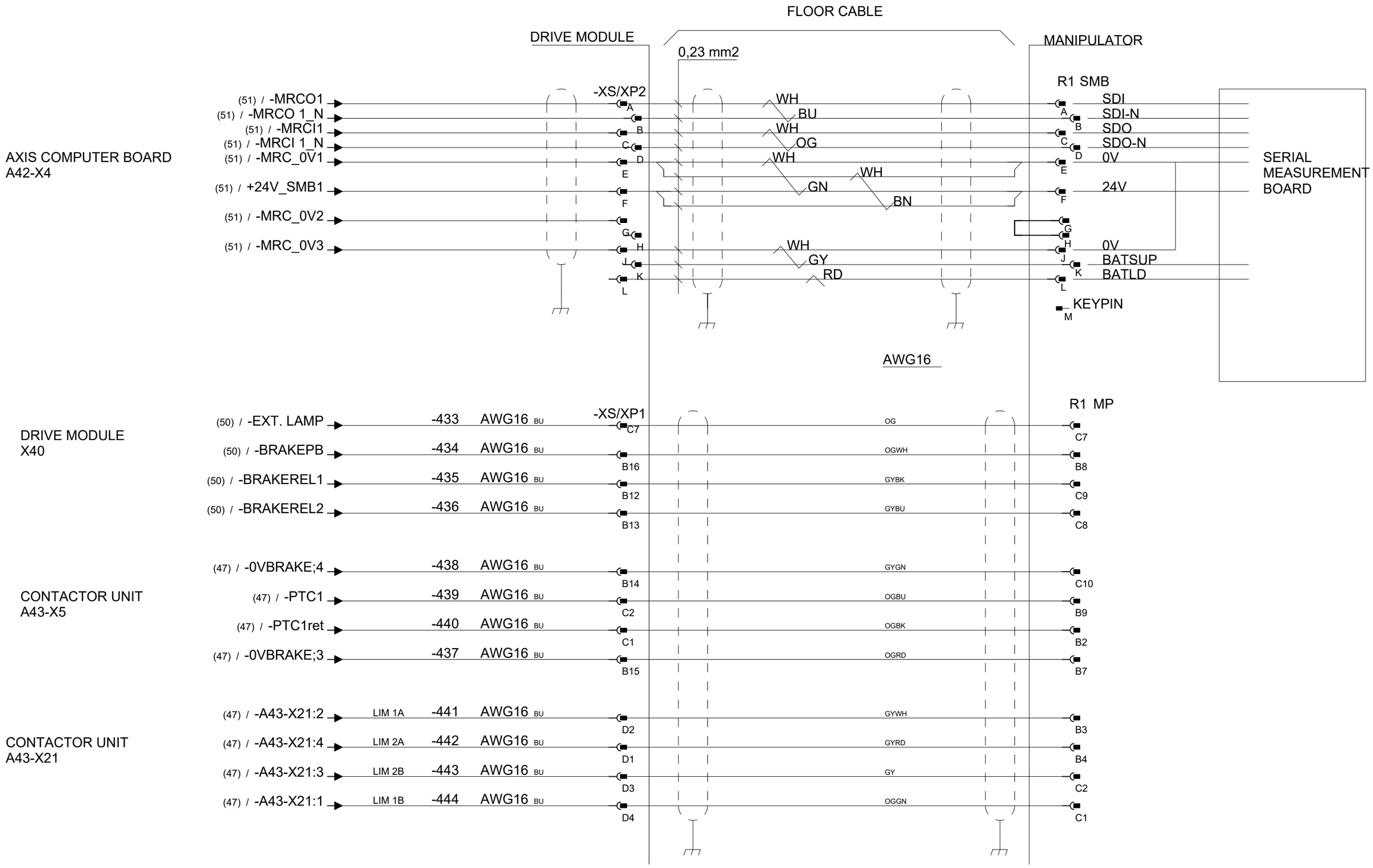

Latest revision:		Lab/Office: RA/RDP	PMC DESIGN 15 Rel: 24B CONTROL CABLE IRB 2400	Status: Approved	Plant: = Location: + Sublocation: +	
				Document no. 3HAC026871-020	Rev. Ind 15	Page 77 Next 78 Total 125
Prepared by, date: A Hägglund	Approved by, date: S Hällgren 2024-03-15					

We reserve all rights in this document and in the information contained therein. Reproduction, use or disclosure to third parties without express authority is strictly forbidden. © Copyright ABB

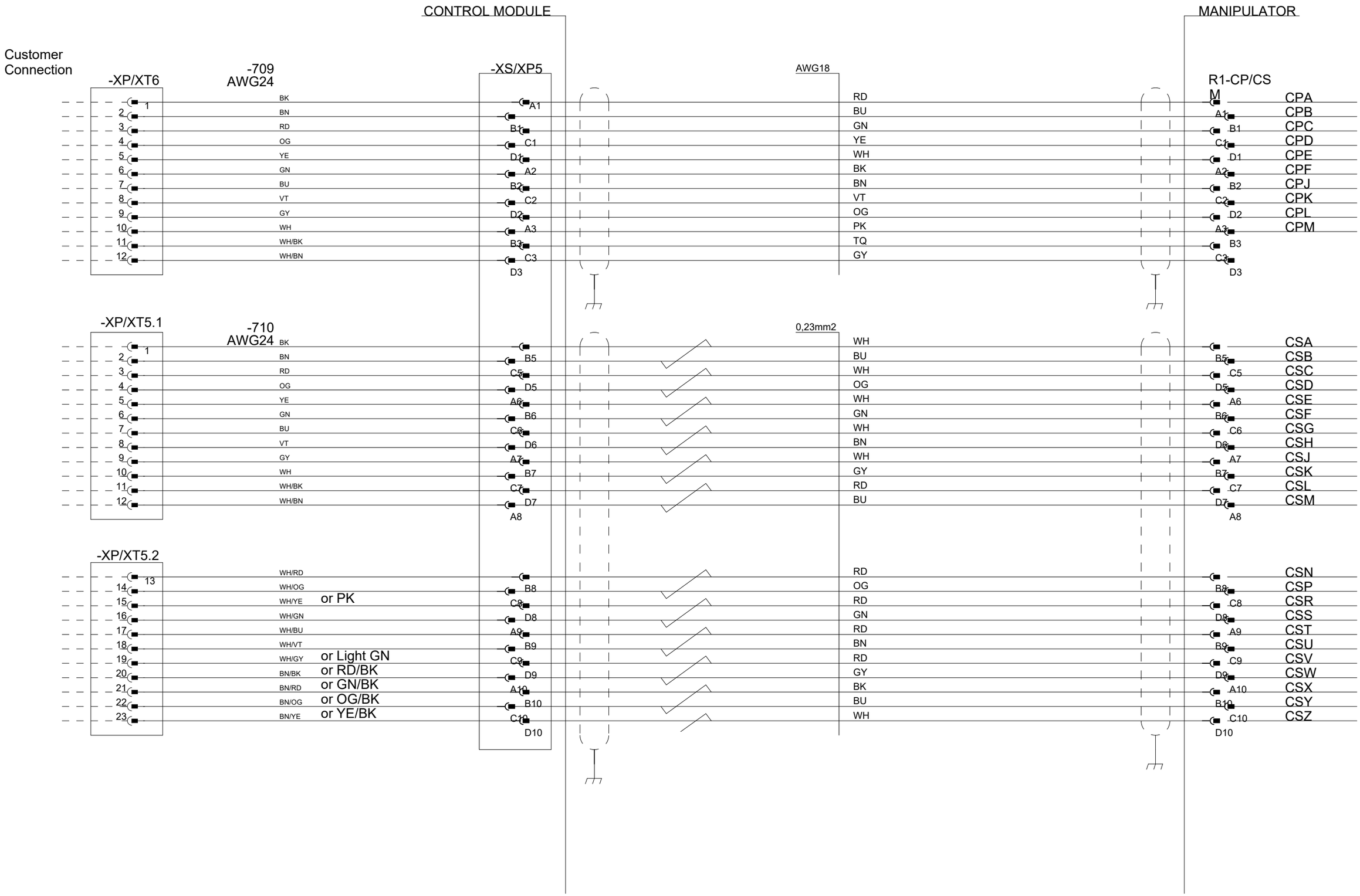

Latest revision:		Lab/Office: RA/RDP	PMC DESIGN 15 Rel: 24B CUSTOMER POWER/SIGNAL IRB 2400	Status: Approved	Plant: = Location: + Sublocation: +
Prepared by, date: A Hägglund	Approved by, date: S Hällgren 2024-03-15			Document no. 3HAC026871-020	Rev. Ind 15

We reserve all rights in this document and in the information contained therein. Reproduction, use or disclosure to third parties without express authority is strictly forbidden. © Copyright ABB

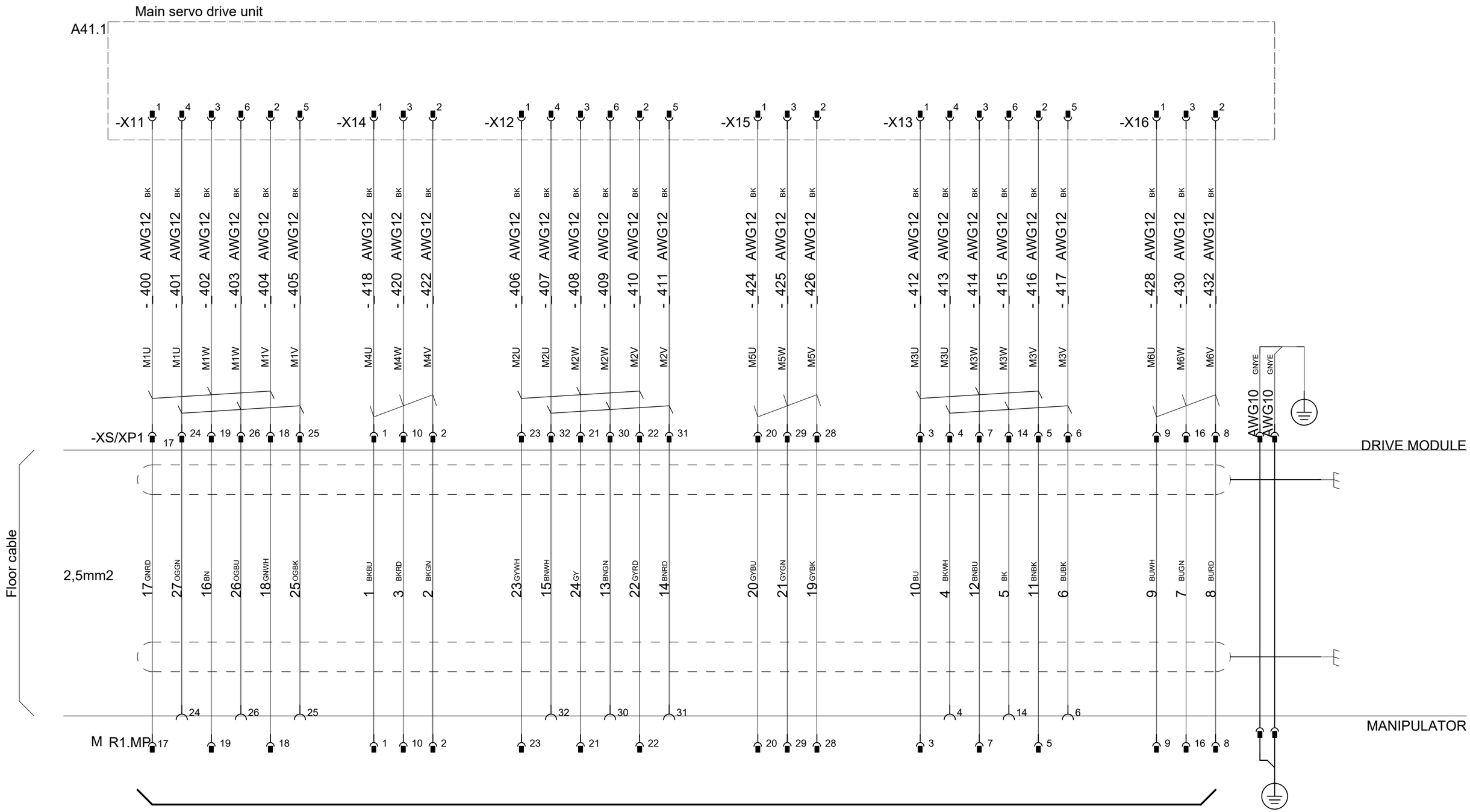

According to Manipulator circuit diagram 3HAC029570-007

Latest revision:		Lab/Office: RA/RDP	PMC DESIGN 15 Rel: 24B SERVO DRIVE SYSTEM IRB 2600	Status: Approved	Plant: = Location: + Sublocation: +
				Document no. 3HAC026871-020	Rev. Ind 15
					Page 79 Next 80 Total 125
Prepared by, date: A Hägglund	Approved by, date: S Hällgren 2024-03-15				

We reserve all rights in this document and in the information contained therein. Reproduction, use or disclosure to third parties without express authority is strictly forbidden. © Copyright ABB

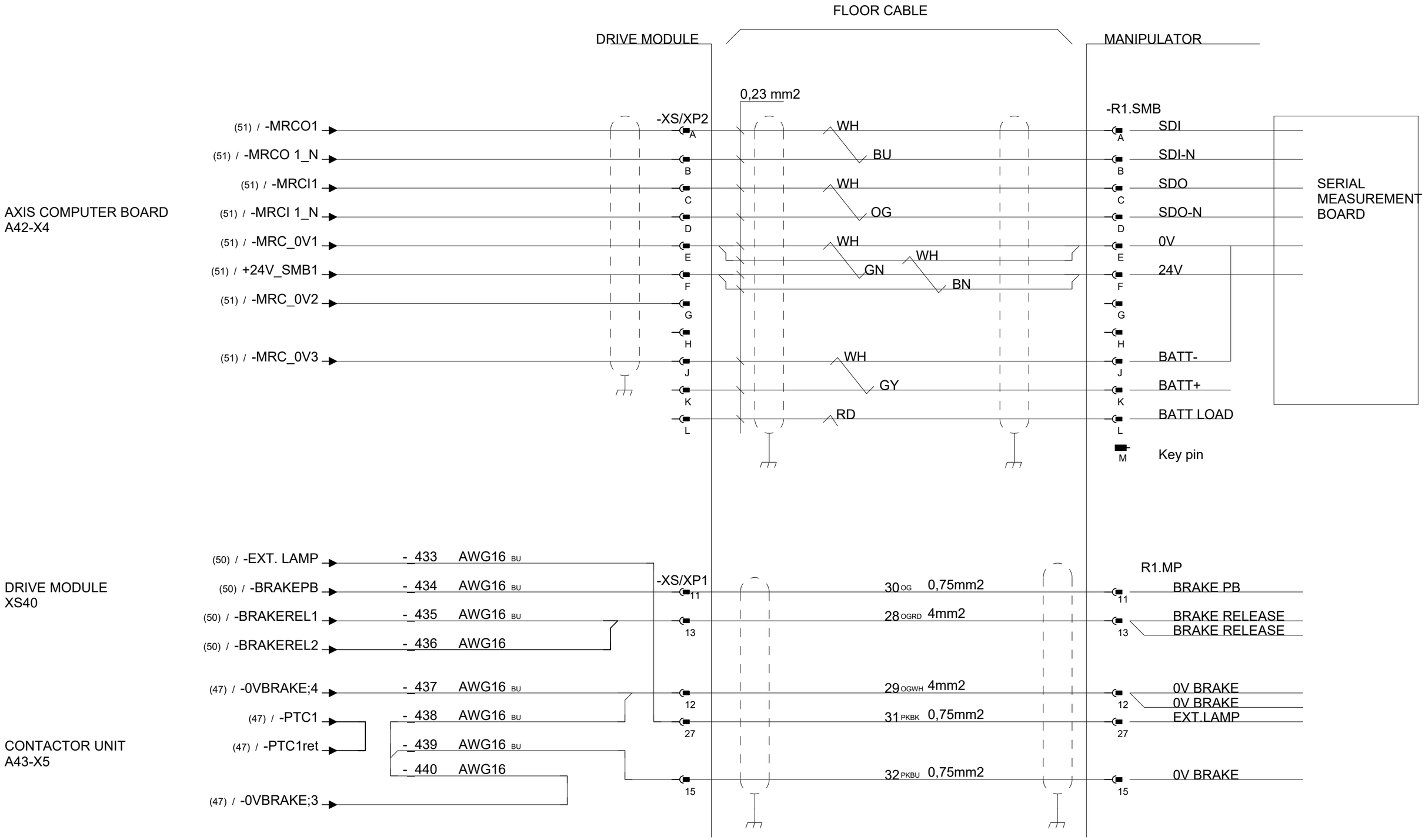

Latest revision:		Lab/Office: RA/RDP	PMC DESIGN 15 Rel: 24B CONTROL CABLE IRB 2600	Status: Approved	Plant: = Location: + Sublocation: +	
				Document no. 3HAC026871-020	Rev. Ind 15	Page 80 Next 81 Total 125
Prepared by, date: A Hägglund	Approved by, date: S Hällgren 2024-03-15					

We reserve all rights in this document and in the information contained therein. Reproduction, use or disclosure to third parties without express authority is strictly forbidden. © Copyright ABB

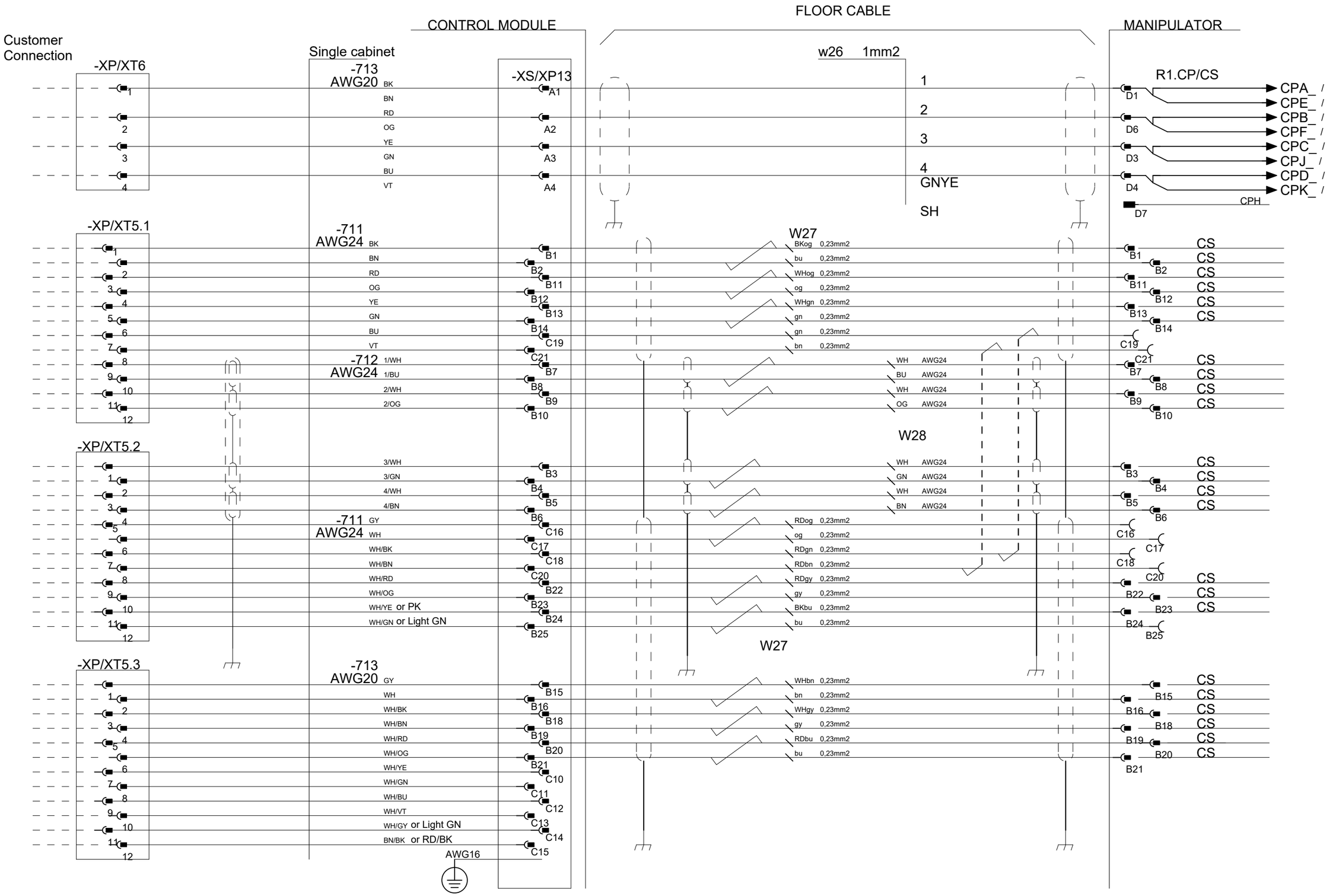

Latest revision:		Lab/Office: RA/RDP	PMC DESIGN 15 Rel: 24B CUSTOMER POWER/SIGNAL IRB2600	Status: Approved	Plant: = Location: + Sublocation: +
Prepared by, date: A Hägglund	Approved by, date: S Hällgren 2024-03-15			Document no. 3HAC026871-020	Rev. Ind 15

Page 81
Next 82
Total 125

We reserve all rights in this document and in the information contained therein. Reproduction, use or disclosure to third parties without express authority is strictly forbidden. © Copyright ABB

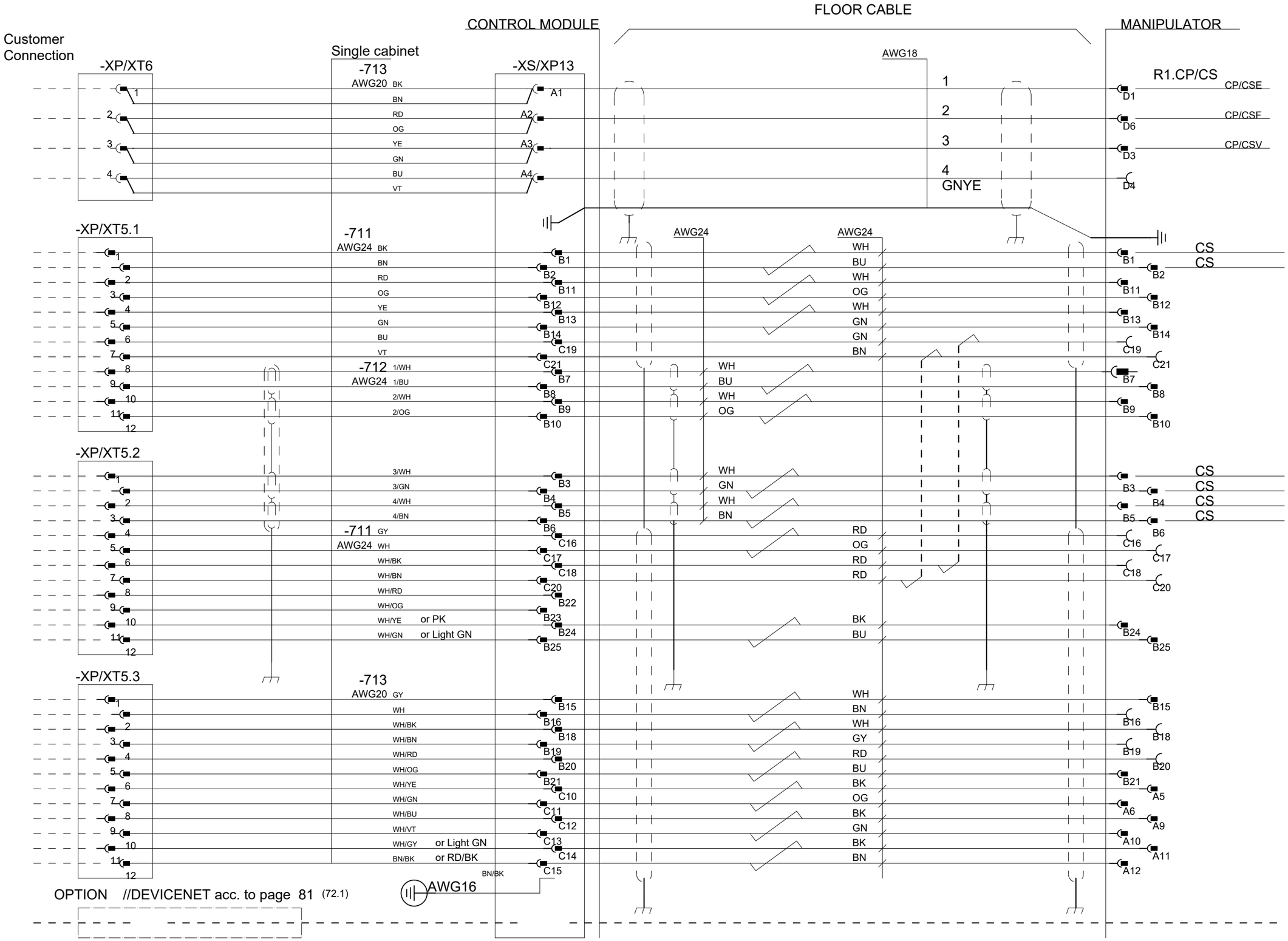

Latest revision:		ABB	Lab/Office: RA/RDP	PMC DESIGN 15 Rel: 24B CUSTOMER POWER/SIGNAL DEVICE NET IRB2600	Status: Approved Plant: = Location: + Sublocation: +
Prepared by, date: A Hägglund	Approved by, date: S Hällgren 2024-03-15				Document no. 3HAC026871-020 Rev. Ind 15 Page 82 Next 83 Total 125

We reserve all rights in this document and in the information contained therein. Reproduction, use or disclosure to third parties without express authority is strictly forbidden. © Copyright ABB

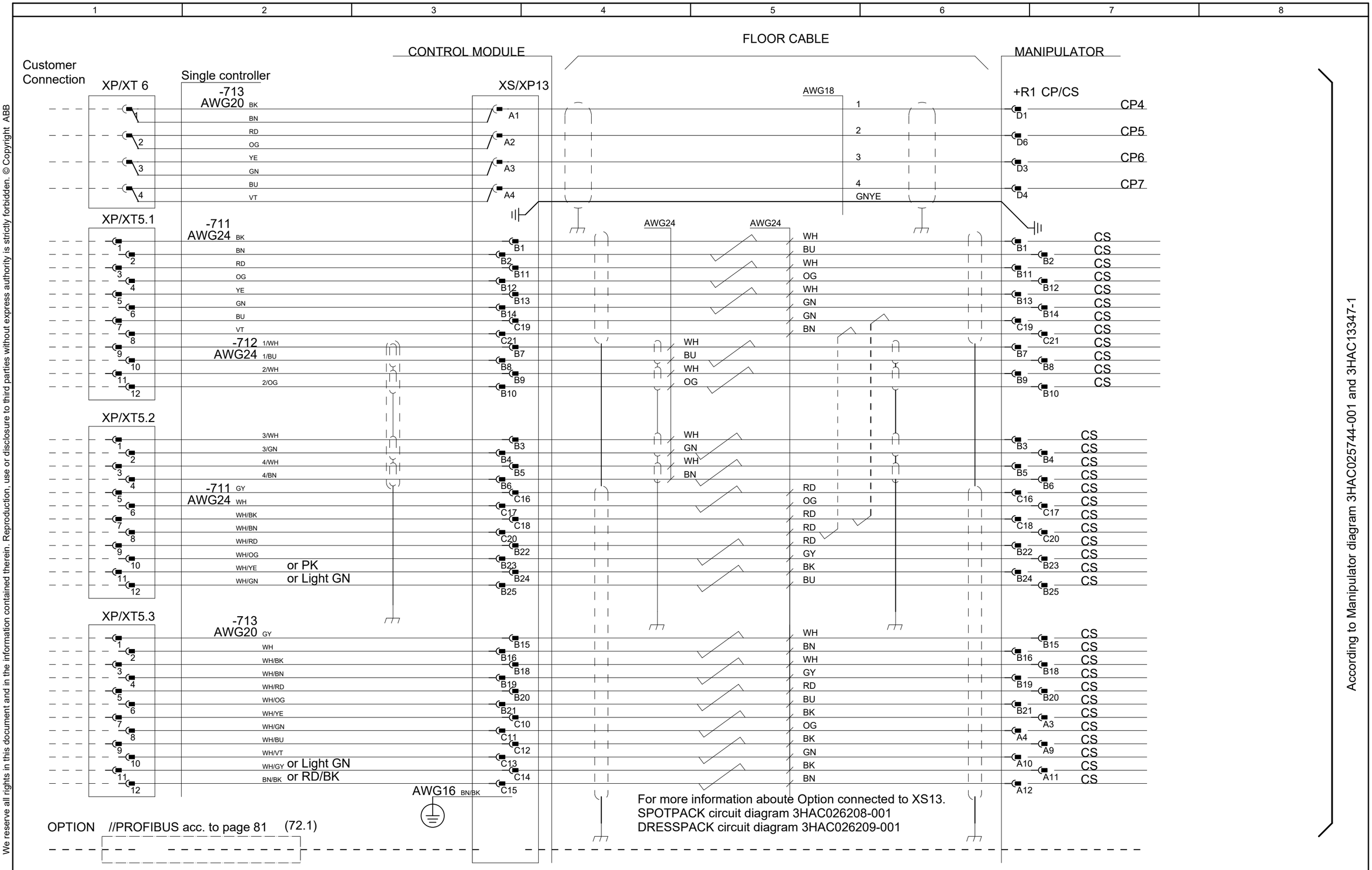

Latest revision:		Lab/Office: RA/RDP	PMC DESIGN 15 Rel: 24B CUSTOMER POWER/SIGNAL PROFI BUS IRB 2600	Status: Approved	Plant: = Location: + Sublocation: +
Prepared by, date: A Hägglund	Approved by, date: S Hällgren 2024-03-15			Document no. 3HAC026871-020	Rev. Ind 15

We reserve all rights in this document and in the information contained therein. Reproduction, use or disclosure to third parties without express authority is strictly forbidden. © Copyright ABB

Customer
Connection

Additinal to page 79 and 80

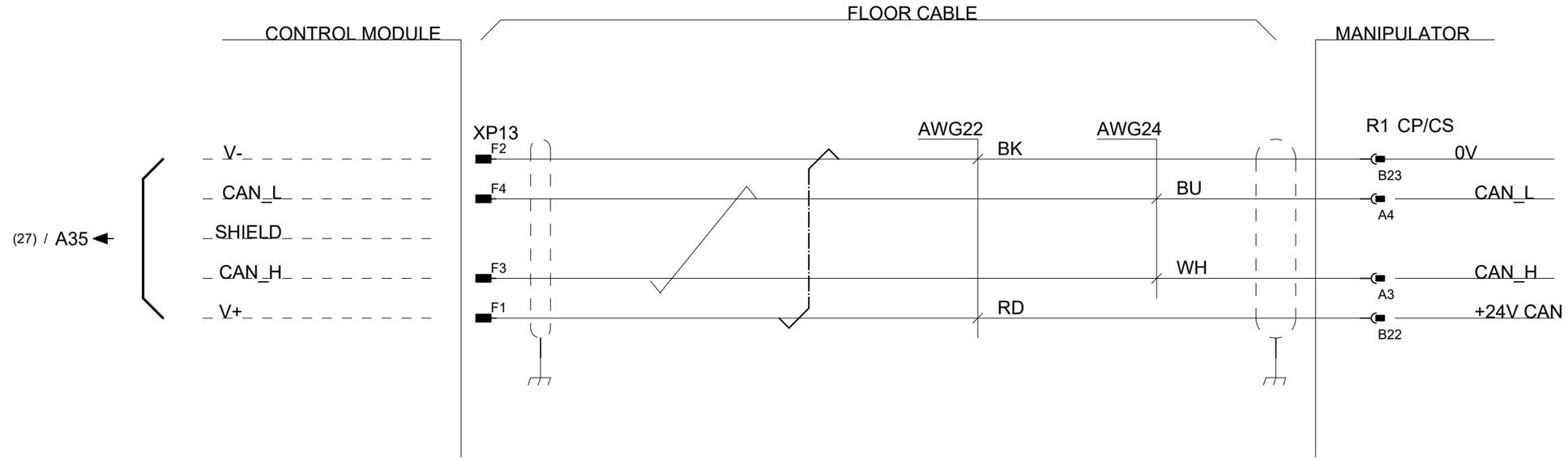

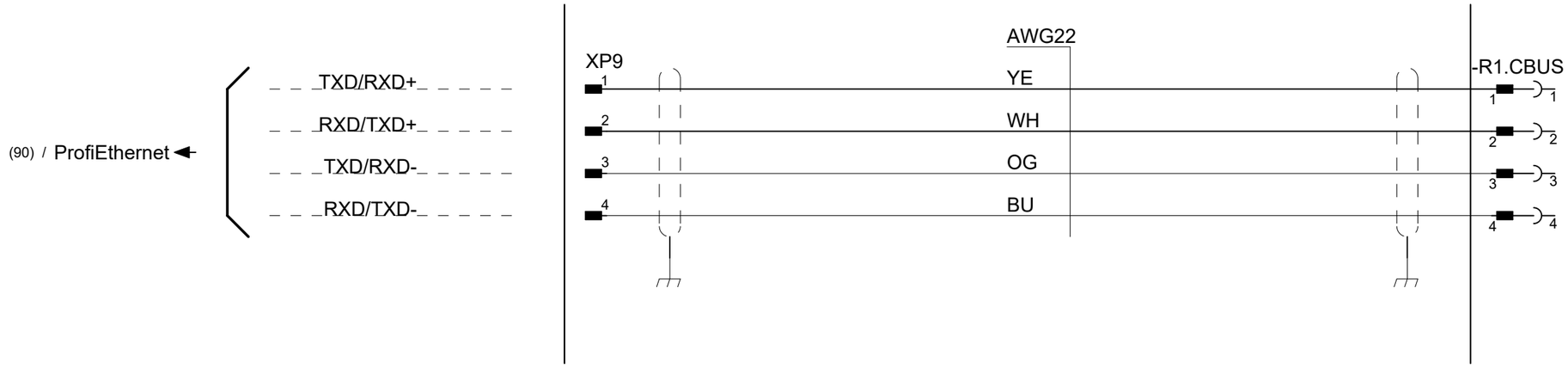

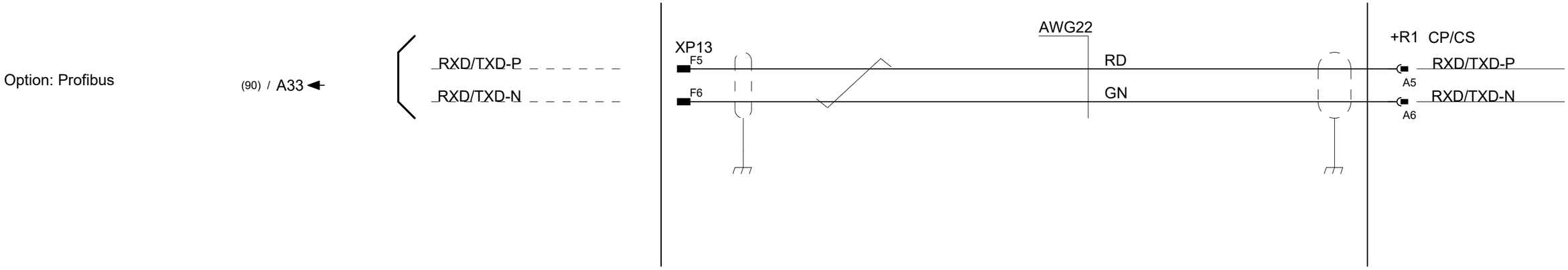

Latest revision:		ABB	Lab/Office: RA/RDP	PMC DESIGN 15 Rel: 24B DevNet/PofiNet/Ethernet/Profibus addition to CP/CS IRB2600	Status: Approved	Plant: = Location: + Sublocation: +
Prepared by, date: A Hägglund	Approved by, date: S Hällgren 2024-03-15				Document no. 3HAC026871-020	Rev. Ind 15

We reserve all rights in this document and in the information contained therein. Reproduction, use or disclosure to third parties without express authority is strictly forbidden. © Copyright ABB

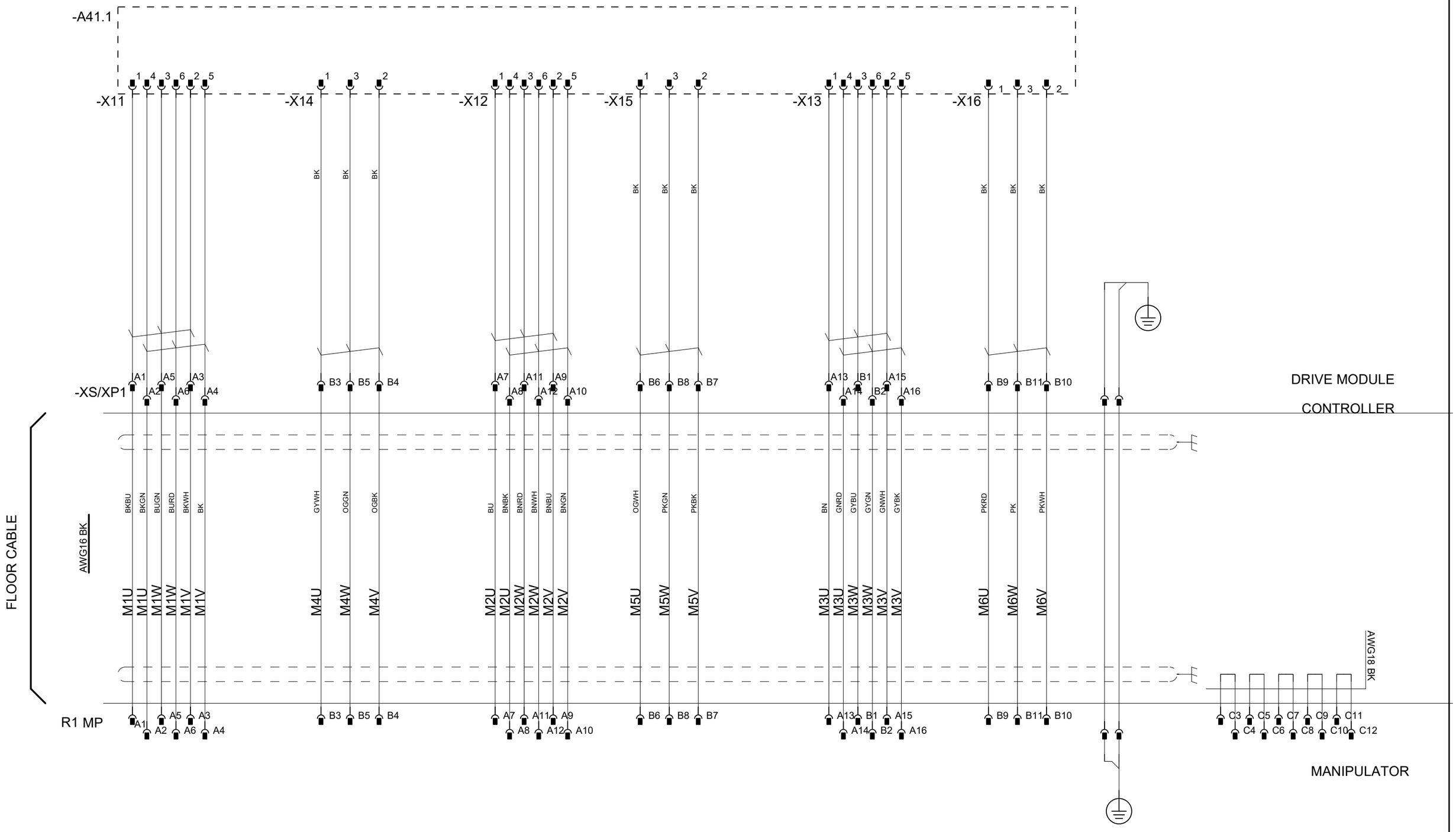

Latest revision:		ABB Lab/Office: RA/RDP	PMC DESIGN 15 Rel: 24B SERVO DRIVE SYSTEM IRB 4400	Status: Approved	Plant: = Location: + Sublocation: +	
				Document no. 3HAC026871-020	Rev. Ind 15	Page 83.4 Next 83.5 Total 125
Prepared by, date: A Hägglund	Approved by, date: S Hällgren 2024-03-15					

We reserve all rights in this document and in the information contained therein. Reproduction, use or disclosure to third parties without express authority is strictly forbidden. © Copyright ABB

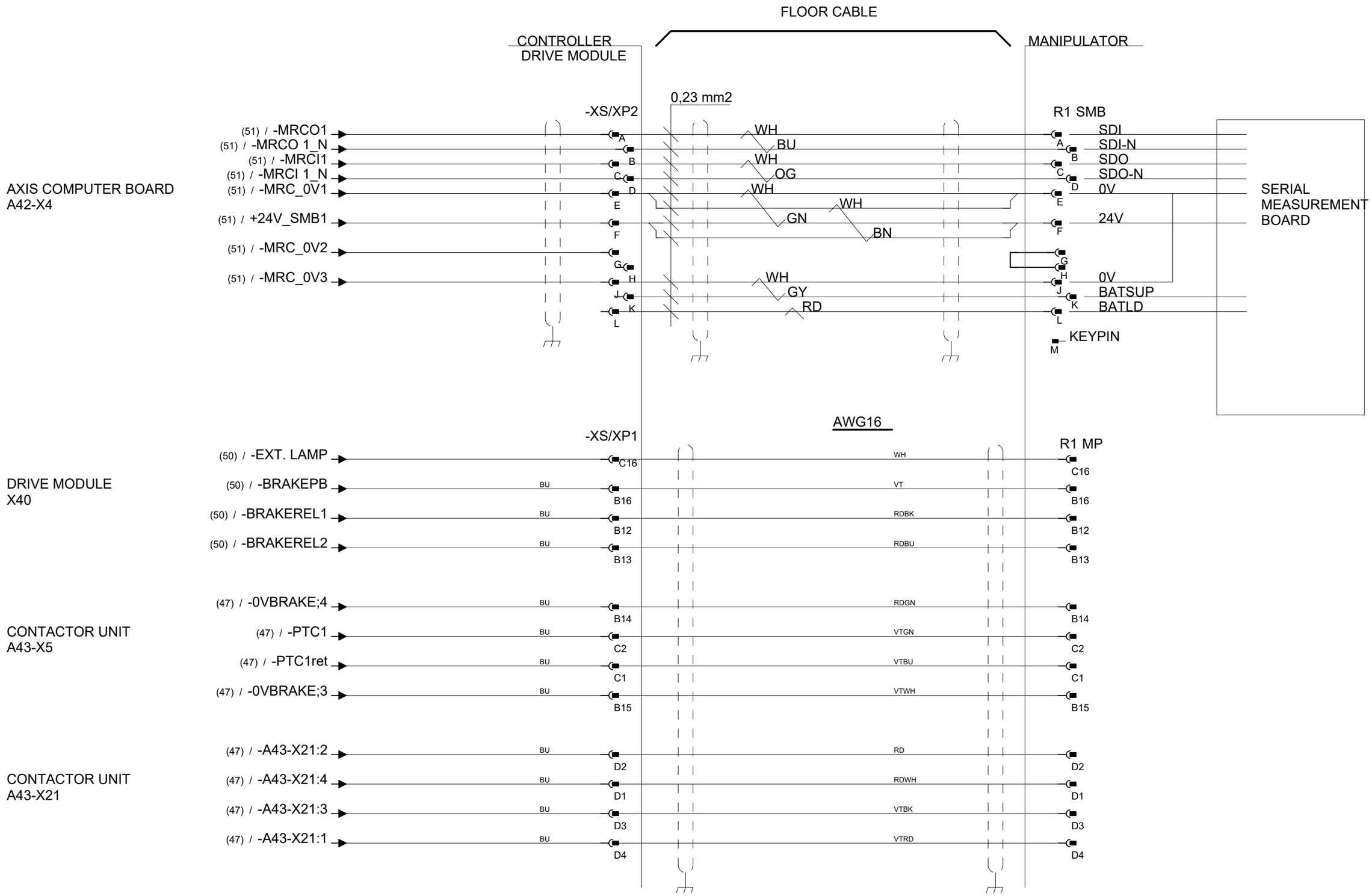

Latest revision:		Lab/Office: RA/RDP	PMC DESIGN 15 Rel: 24B CONTROL CABLE IRB 4400	Status: Approved	Plant: = Location: + Sublocation: +
Prepared by, date: A Hägglund	Approved by, date: S Hällgren 2024-03-15			Document no. 3HAC026871-020	Rev. Ind 15

We reserve all rights in this document and in the information contained therein. Reproduction, use or disclosure to third parties without express authority is strictly forbidden. © Copyright ABB

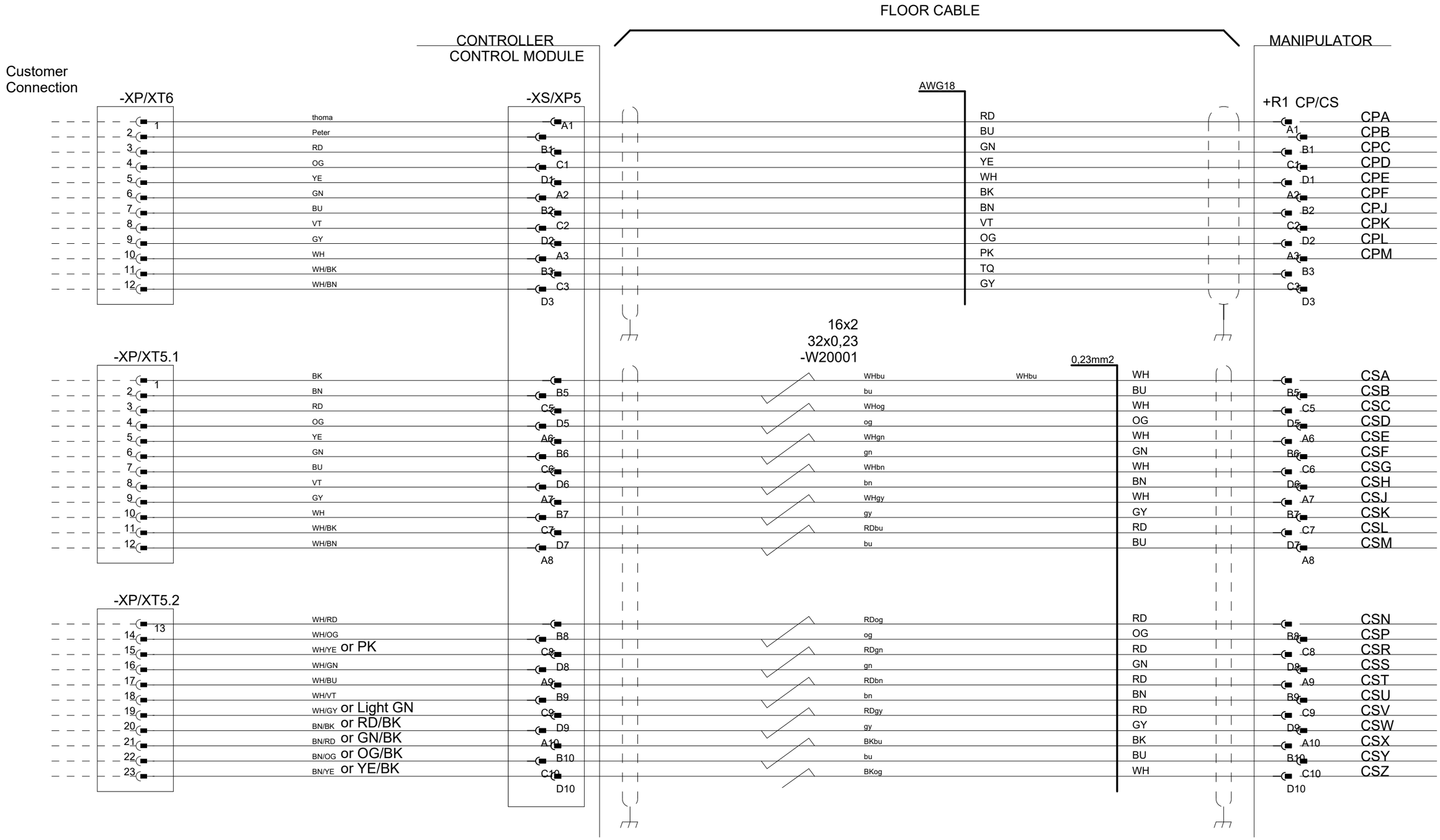

Latest revision:		Lab/Office: RA/RDP	PMC DESIGN 15 Rel: 24B CUSTOMER POWER/SIGNAL SINGLE CABINET IRB 4400	Status: Approved	Plant: = Location: + Sublocation: +	
Prepared by, date: A Hägglund	Approved by, date: S Hällgren 2024-03-15			Document no. 3HAC026871-020	Rev. Ind 15	Page 83.6 Next 85 Total 125

We reserve all rights in this document and in the information contained therein. Reproduction, use or disclosure to third parties without express authority is strictly forbidden. © Copyright ABB

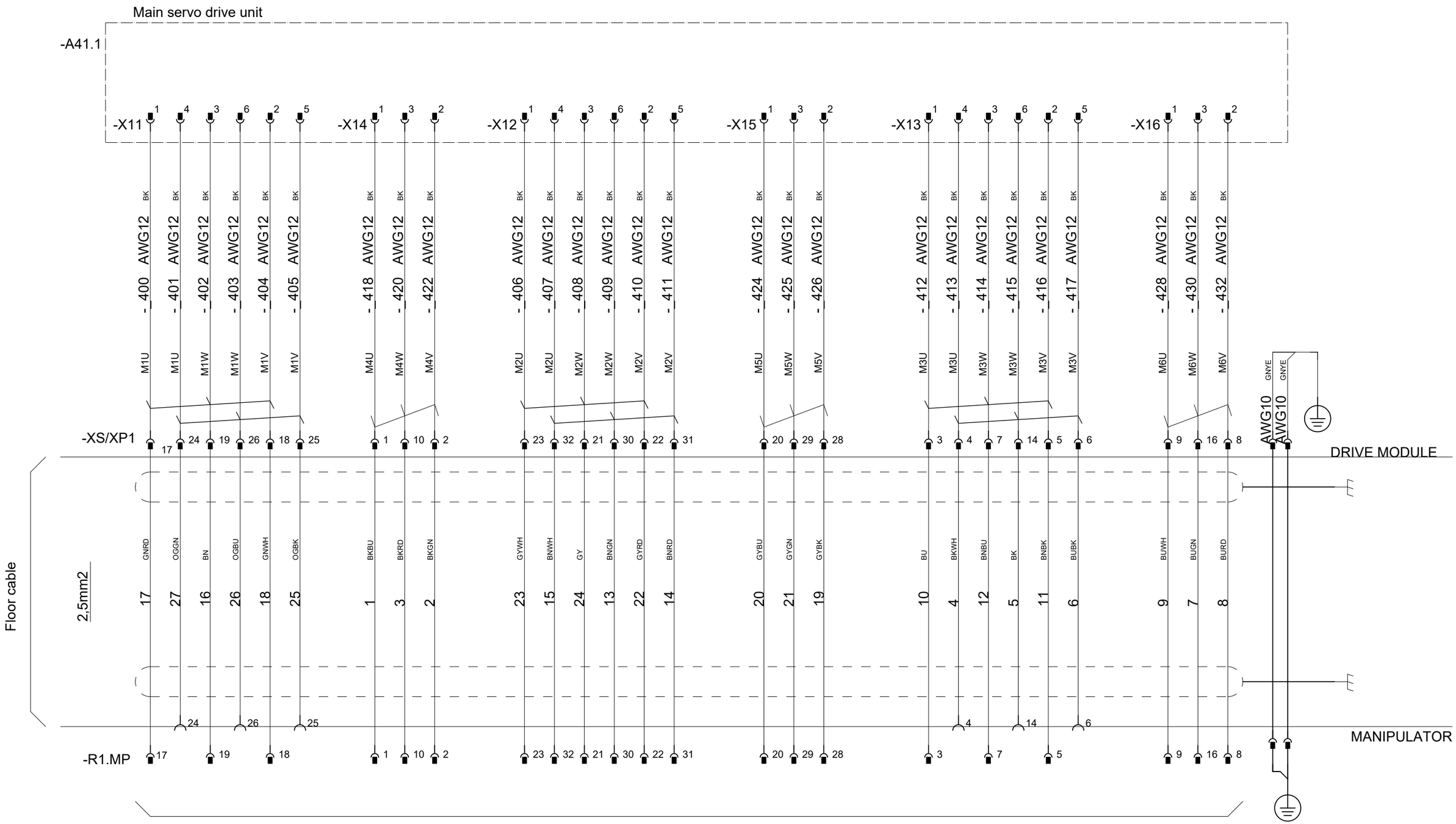

According to Manipulator circuit diagram 3HAC029038-003

Latest revision:		Lab/Office: RA/RDP	PMC DESIGN 15 Rel: 24B SERVO DRIVE SYSTEM IRB 4600	Status: Approved	Plant: = Location: + Sublocation: +
				Document no. 3HAC026871-020	Rev. Ind 15
					Page 85 Next 86 Total 125
Prepared by, date: A Hägglund	Approved by, date: S Hällgren 2024-03-15				

We reserve all rights in this document and in the information contained therein. Reproduction, use or disclosure to third parties without express authority is strictly forbidden. © Copyright ABB

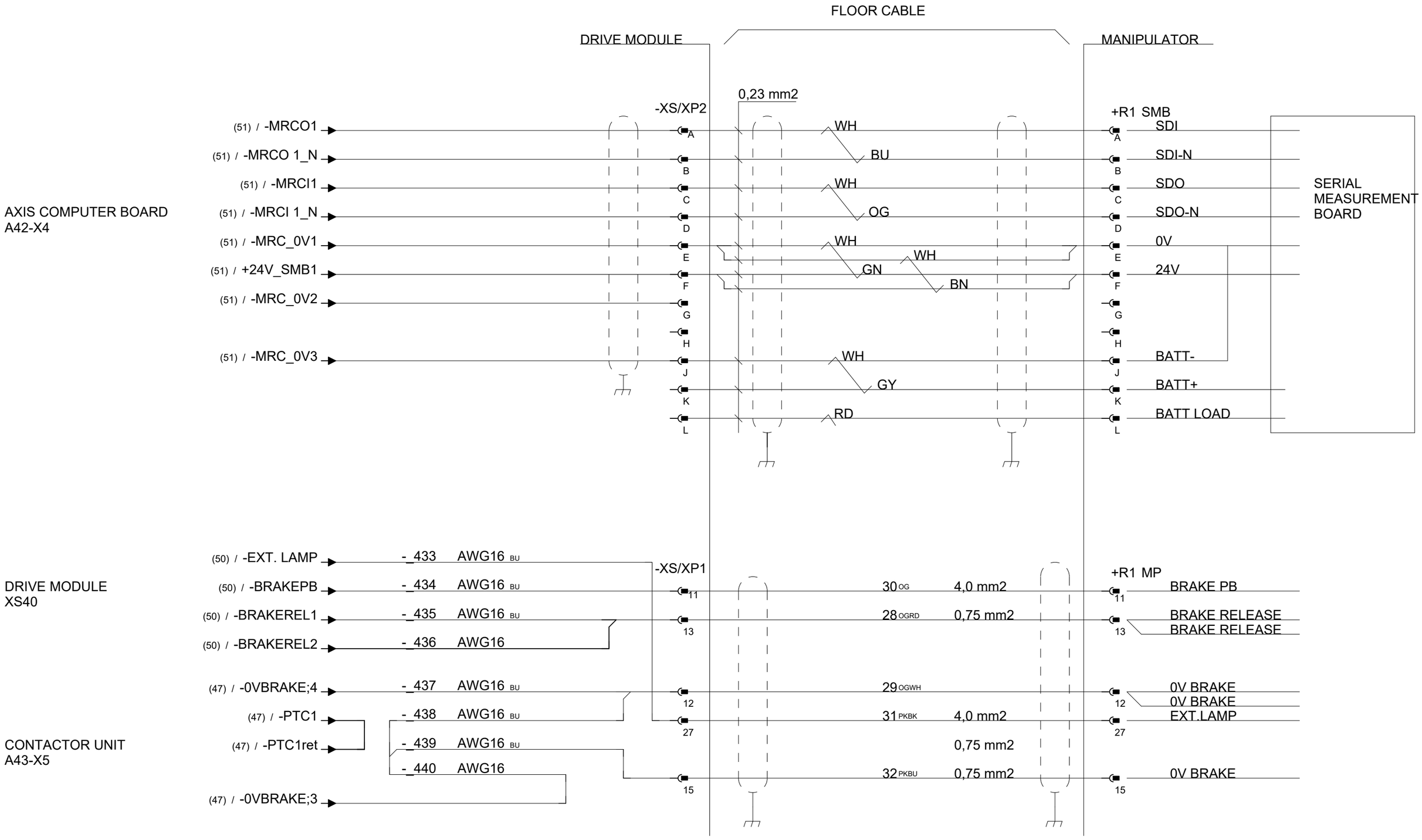

Latest revision:		Lab/Office: RA/RDP	PMC DESIGN 15 Rel: 24B CONTROL CABLE IRB 4600	Status: Approved	Plant: = Location: + Sublocation: +
Prepared by, date: A Hägglund	Approved by, date: S Hällgren 2024-03-15			Document no. 3HAC026871-020	Rev. Ind 15

We reserve all rights in this document and in the information contained therein. Reproduction, use or disclosure to third parties without express authority is strictly forbidden. © Copyright ABB

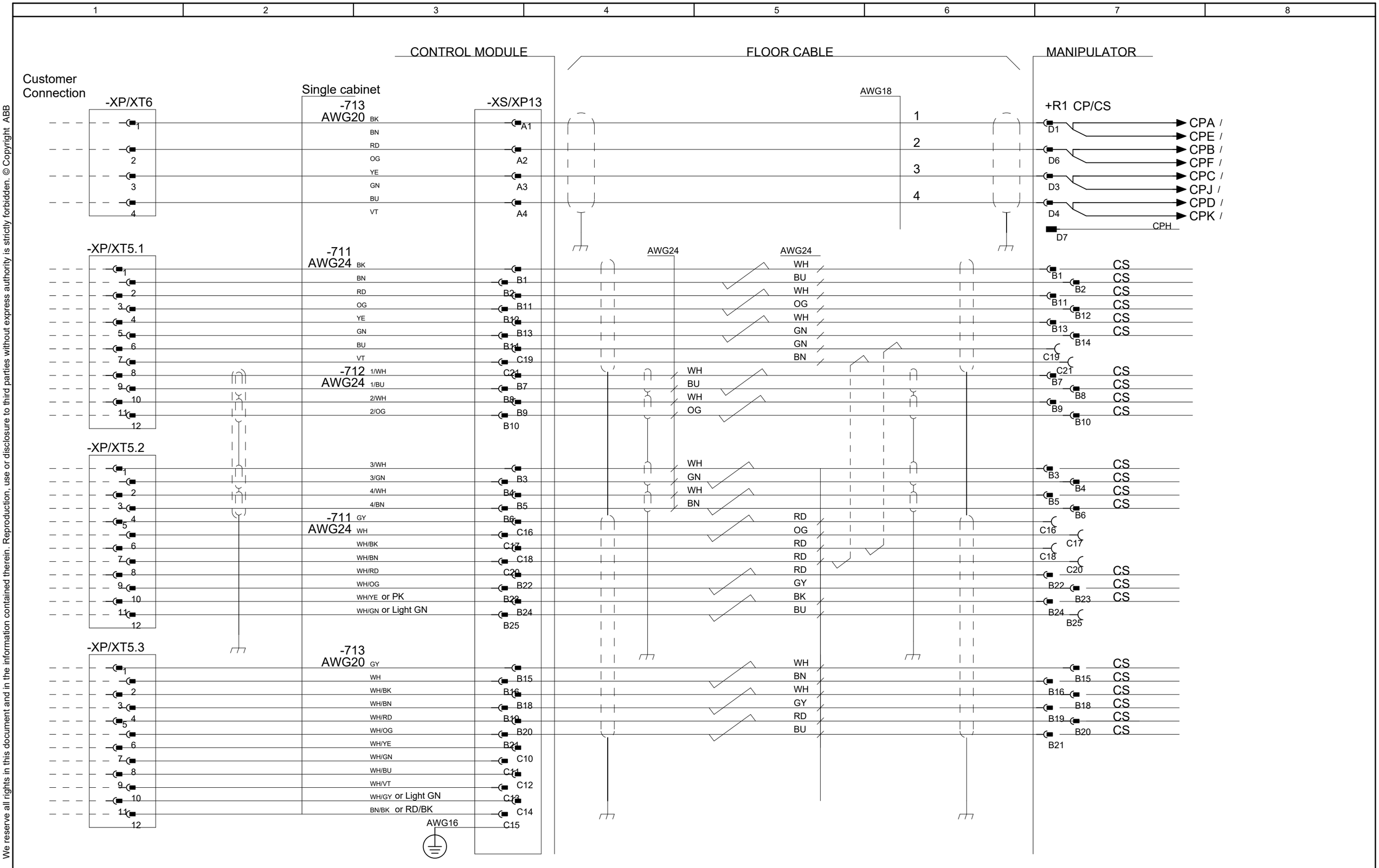

Latest revision:		Lab/Office: RA/RDP	PMC DESIGN 15 Rel: 24B CUSTOMER POWER/SIGNAL IRB4600	Status: Approved	Plant: = Location: + Sublocation: +
				Document no. 3HAC026871-020	Rev. Ind 15
Prepared by, date: A Hägglund	Approved by, date: S Hällgren 2024-03-15				Page 87 Next 88 Total 125

We reserve all rights in this document and in the information contained therein. Reproduction, use or disclosure to third parties without express authority is strictly forbidden. © Copyright ABB

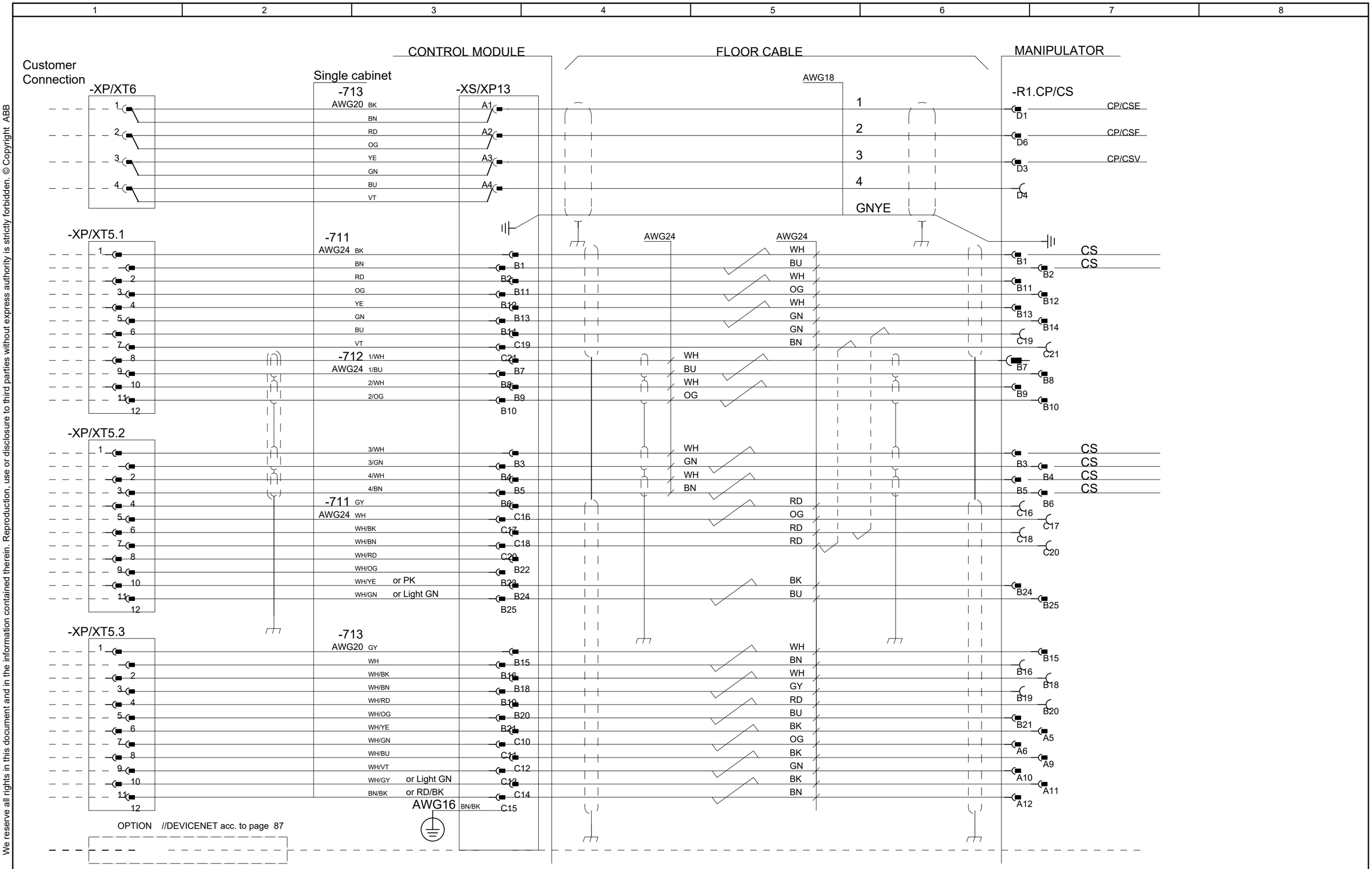

Latest revision:		ABB	Lab/Office: RA/RDP	PMC DESIGN 15 Rel: 24B CUSTOMER POWER/SIGNAL DEVICE NET IRB4600	Status: Approved Plant: = Location: + Sublocation: +
Prepared by, date: A Hägglund	Approved by, date: S Hällgren 2024-03-15				Document no. 3HAC026871-020 Rev. Ind 15 Page 88 Next 89 Total 125

We reserve all rights in this document and in the information contained therein. Reproduction, use or disclosure to third parties without express authority is strictly forbidden. © Copyright ABB

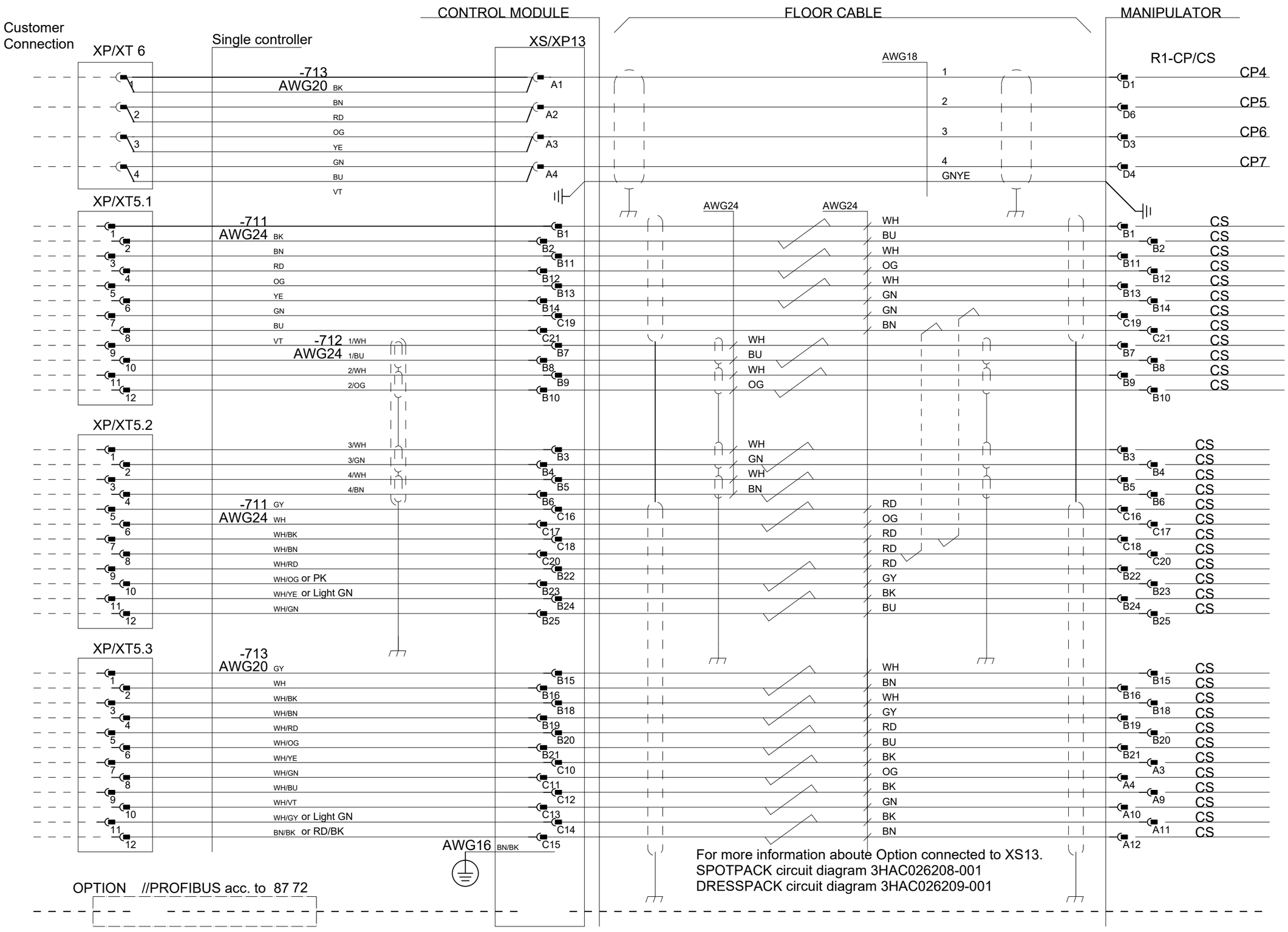

According to Manipulator diagram 3HAC025744-001 and 3HAC13347-1

Latest revision:		Lab/Office: RA/RDP	PMC DESIGN 15 Rel: 24B CUSTOMER POWER/SIGNAL PROFI BUS IRB 4600	Status: Approved	Plant: = Location: + Sublocation: +
Prepared by, date: A Hägglund	Approved by, date: S Hällgren 2024-03-15			Document no. 3HAC026871-020	Rev. Ind 15

We reserve all rights in this document and in the information contained therein. Reproduction, use or disclosure to third parties without express authority is strictly forbidden. © Copyright ABB

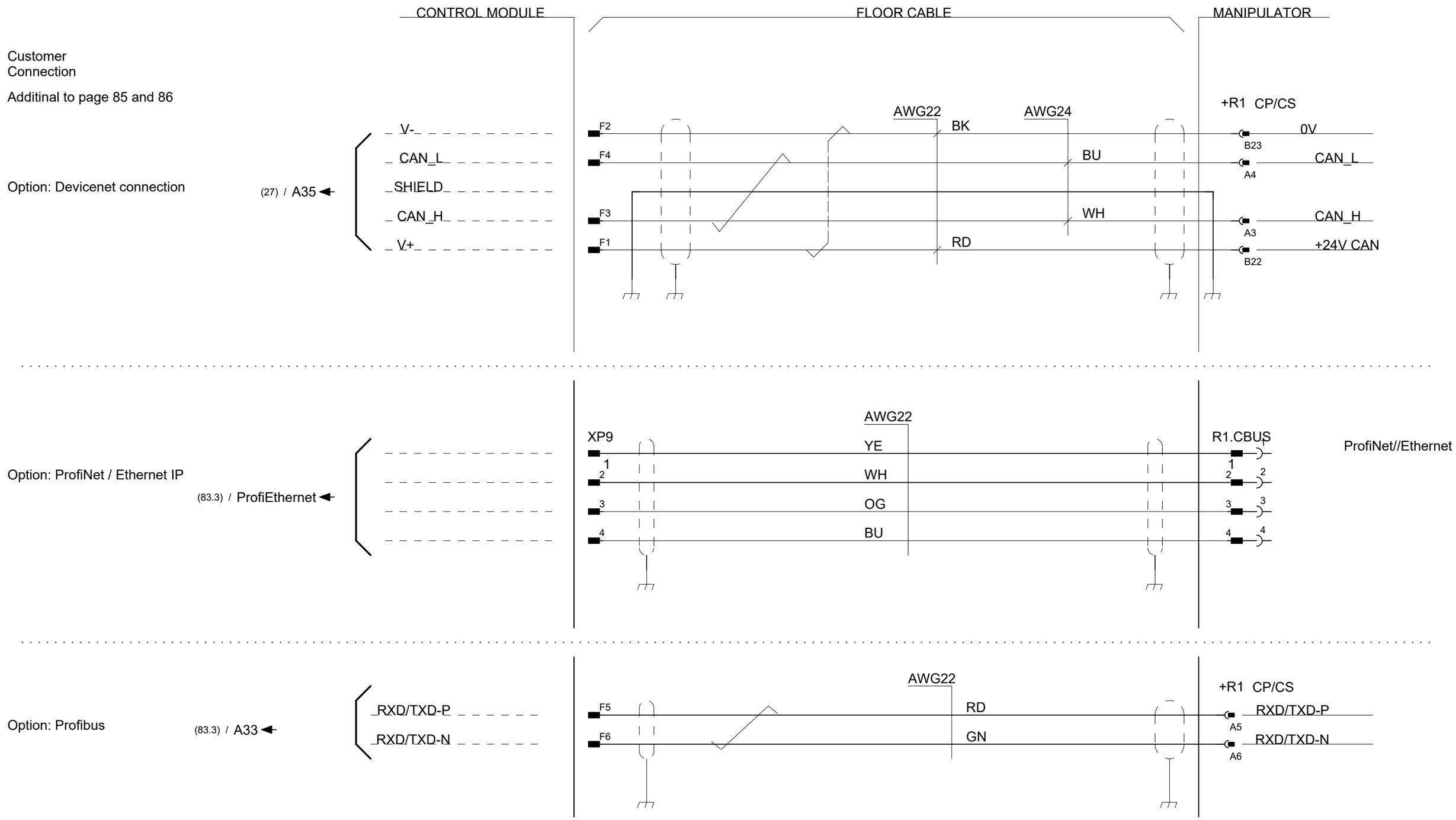

Latest revision:		Lab/Office: RA/RDP	PMC DESIGN 15 Rel: 24B DevNet/PofiNet/Ethernet/Profibus additional to CP/CS //IRB4600	Status: Approved	Plant: = Location: + Sublocation: +
Prepared by, date: A Hägglund	Approved by, date: S Hällgren 2024-03-15			Document no. 3HAC026871-020	Rev. Ind 15

We reserve all rights in this document and in the information contained therein. Reproduction, use or disclosure to third parties without express authority is strictly forbidden. © Copyright ABB

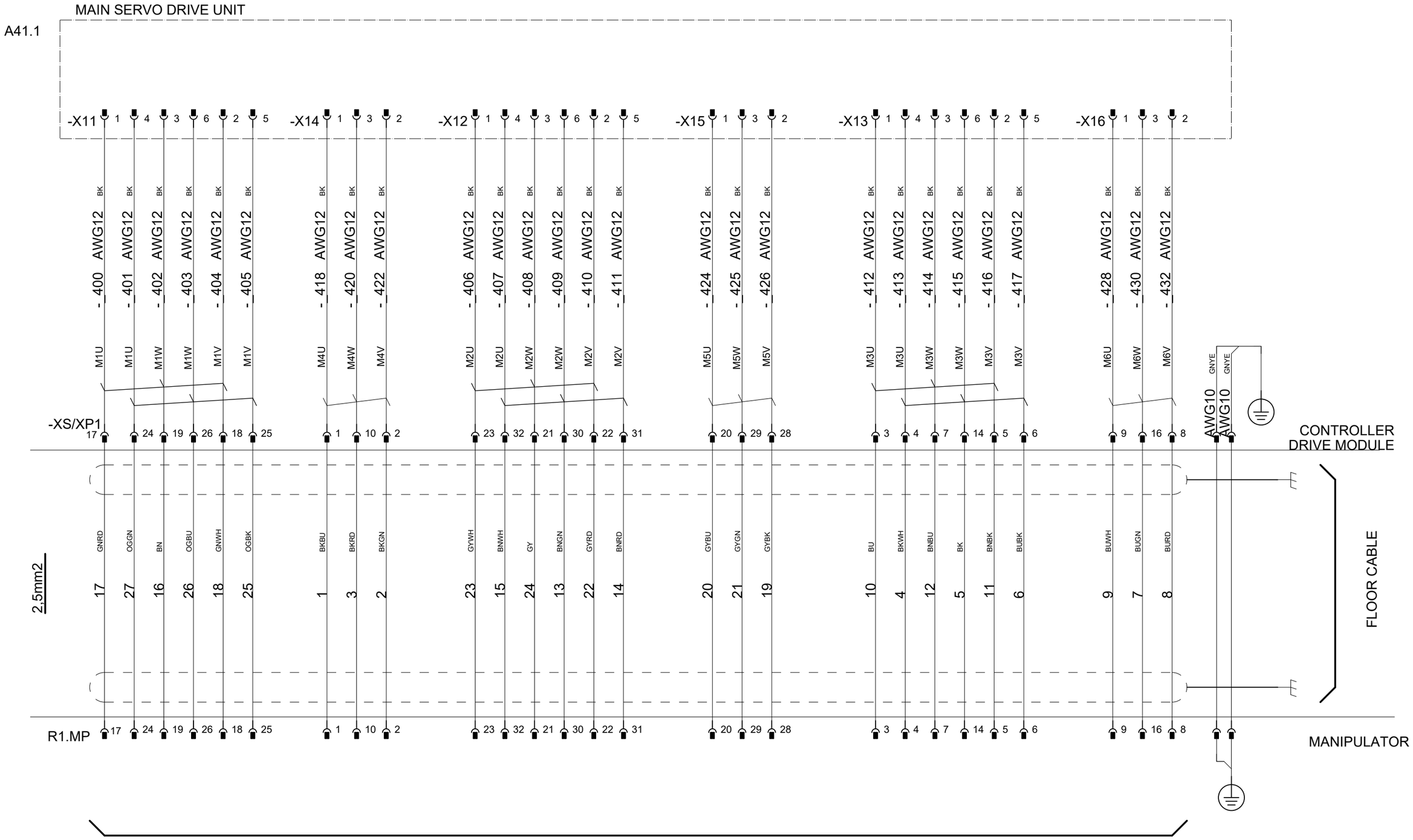

According to manipulator circuit diagram 3HAC043446-005 r00

Latest revision:		Lab/Office: RA/RDP	PMC DESIGN 15 Rel: 24B SERVO DRIVE SYSTEM IRB 6700	Status: Approved	Plant: = Location: + Sublocation: +
Prepared by, date: A Hägglund	Approved by, date: S Hällgren 2024-03-15			Document no. 3HAC026871-020	Rev. Ind 15

We reserve all rights in this document and in the information contained therein. Reproduction, use or disclosure to third parties without express authority is strictly forbidden. © Copyright ABB

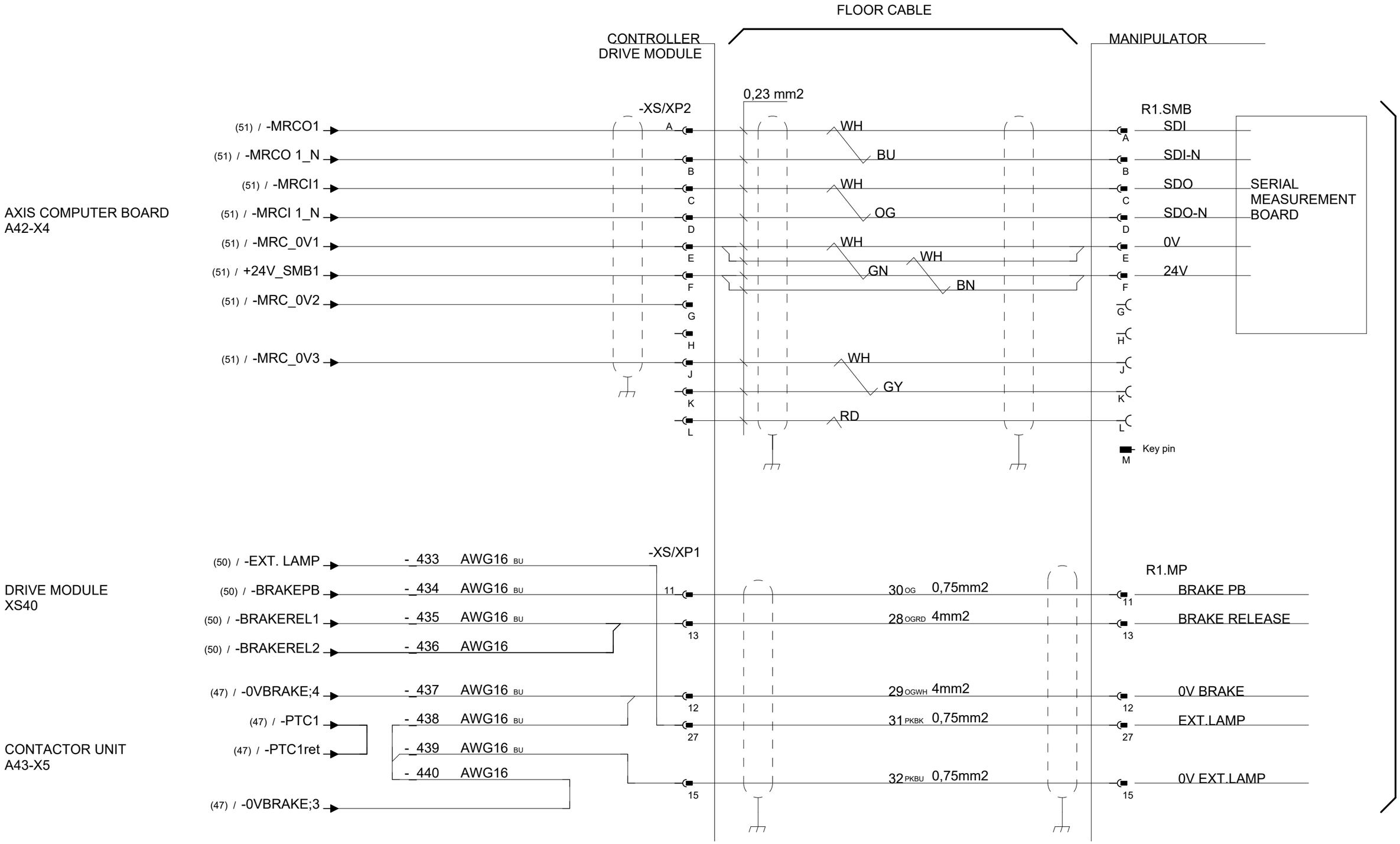

Latest revision:		ABB	Lab/Office: RA/RDP	PMC DESIGN 15 Rel: 24B CONTROL CABLE IRB 6700	Status: Approved Plant: = Location: + Sublocation: +
Prepared by, date: A Hägglund	Approved by, date: S Hällgren 2024-03-15				Document no. 3HAC026871-020 Rev. Ind 15 Page 92 Next 93 Total 125

We reserve all rights in this document and in the information contained therein. Reproduction, use or disclosure to third parties without express authority is strictly forbidden. © Copyright ABB

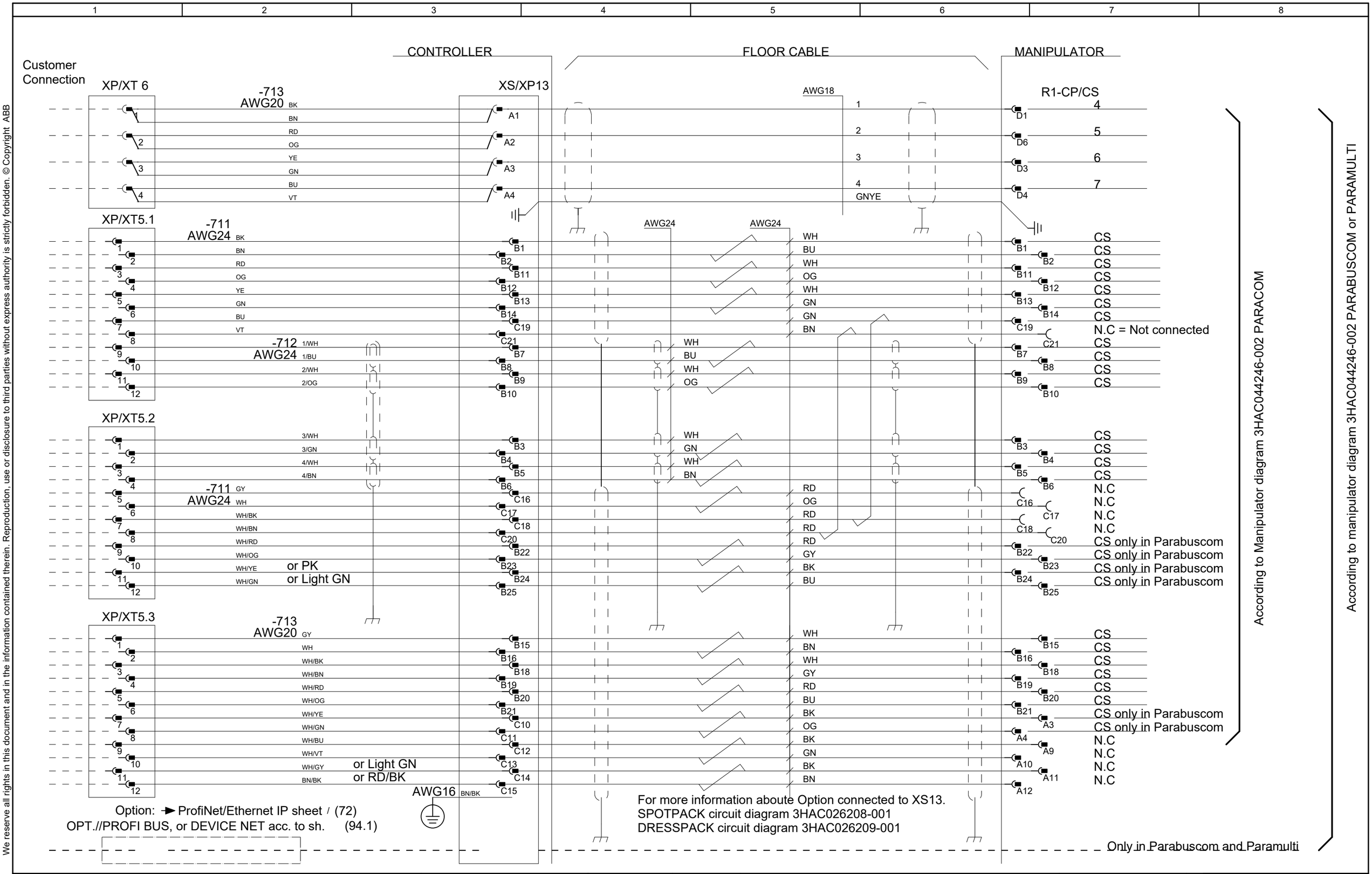

Latest revision:		Lab/Office: RA/RDP	PMC DESIGN 15 Rel: 24B CUSTOMER POWER/SIGNAL, PARACOM PARAMULTI , PARABUSCOM IRB 6700	Status: Approved	Plant: = Location: + Sublocation: +
Prepared by, date: A Hägglund	Approved by, date: S Hällgren 2024-03-15			Document no. 3HAC026871-020	Rev. Ind 15
					Page 93 Next 94 Total 125

We reserve all rights in this document and in the information contained therein. Reproduction, use or disclosure to third parties without express authority is strictly forbidden. © Copyright ABB

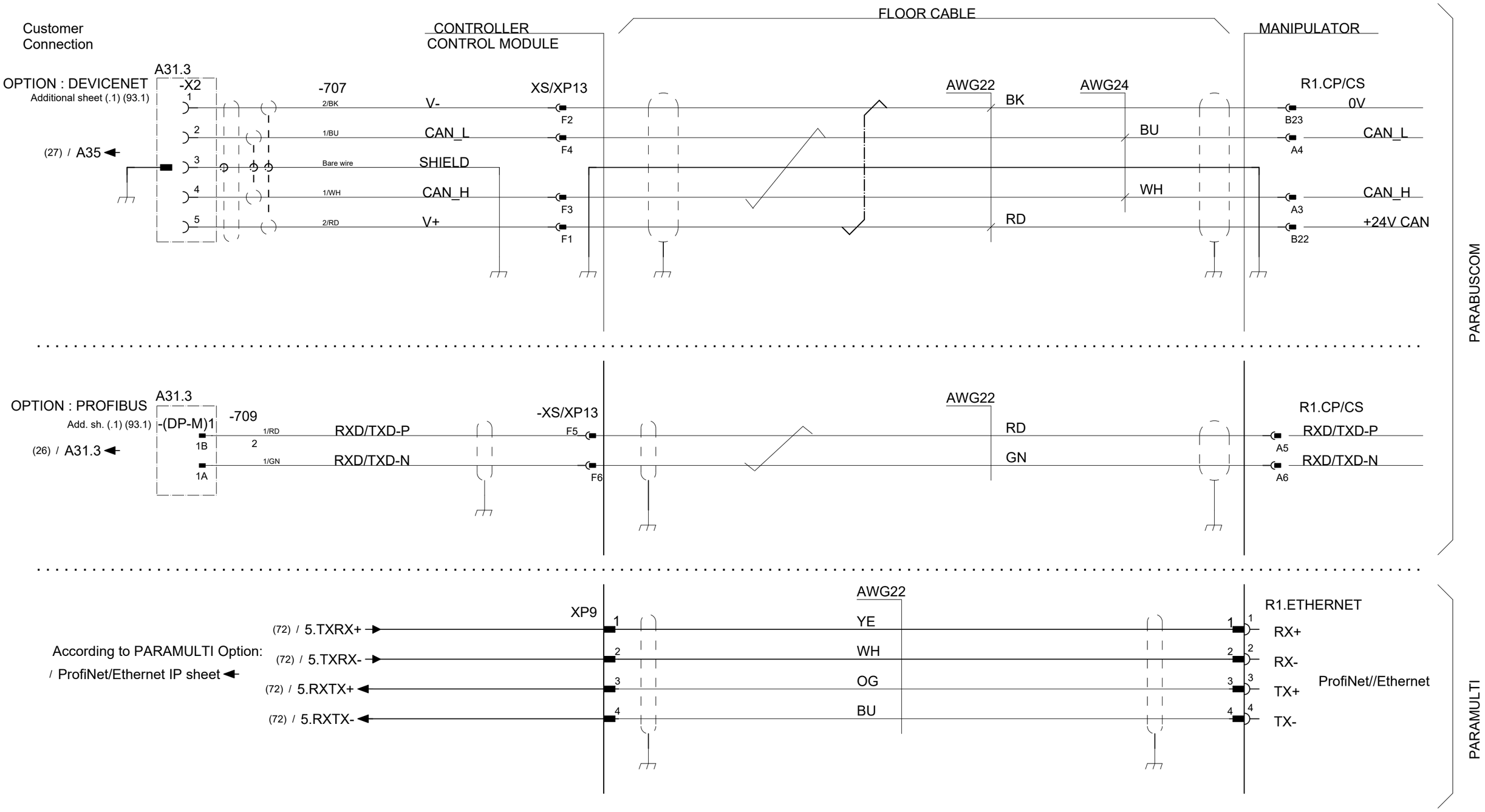

Latest revision:		Lab/Office: RA/RDP	PMC DESIGN 15 Rel: 24B DevNet//EtherNet//ProfiNet//PBUS ADDITION TO CP/CS IRB 6700	Status: Approved	Plant: = Location: + Sublocation: +
Prepared by, date: A Hägglund	Approved by, date: S Hällgren 2024-03-15			Document no. 3HAC026871-020	Rev. Ind 15

We reserve all rights in this document and in the information contained therein. Reproduction, use or disclosure to third parties without express authority is strictly forbidden. © Copyright ABB

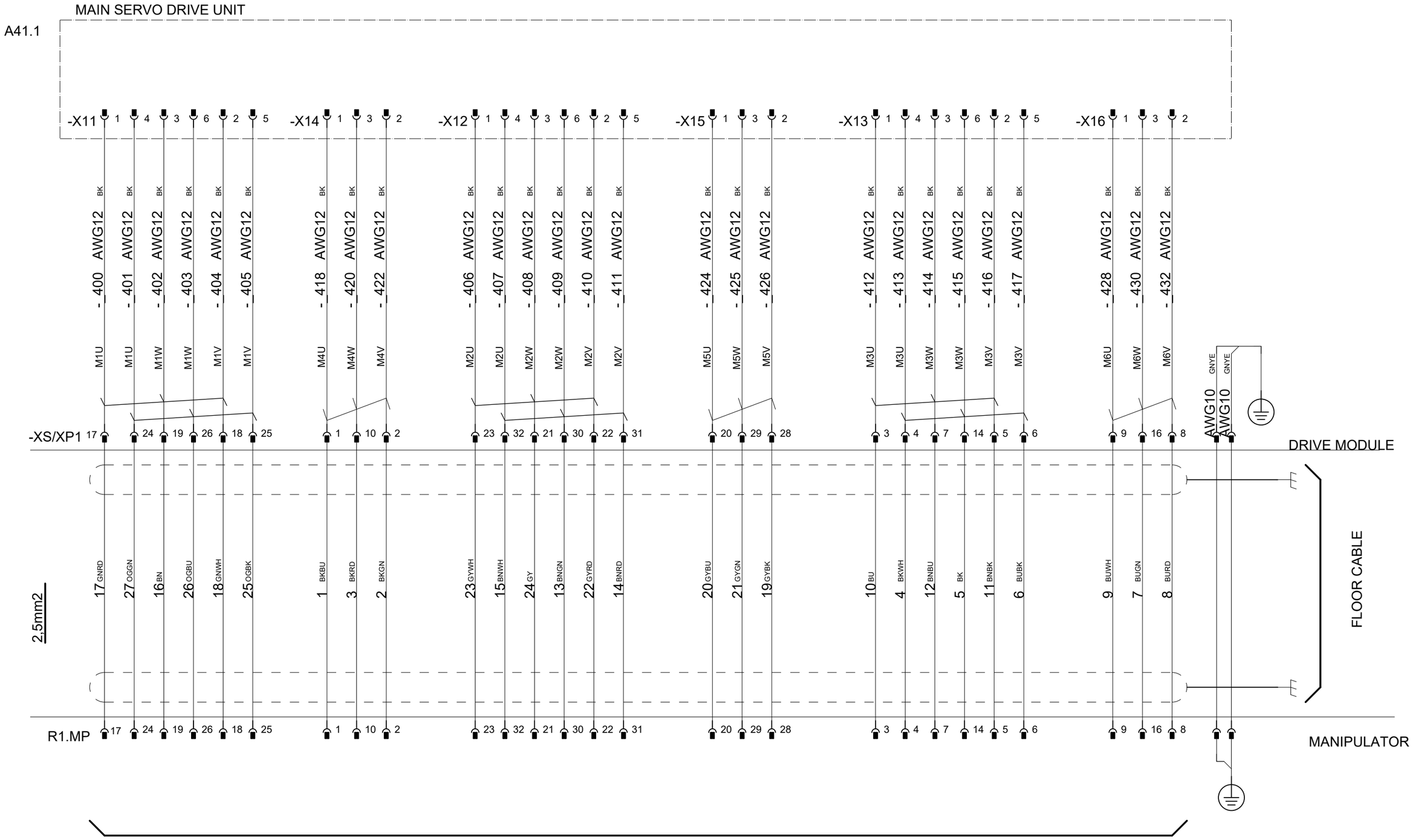

According to Manipulator IRB66XX - 76XX circuit diagram 3HAC025744-001

Latest revision:		ABB Lab/Office: RA/RDP	PMC DESIGN 15 Rel: 24B SERVO DRIVE SYSTEM IRB 66xx - 76xx	Status: Approved	Plant: = Location: + Sublocation: +
Prepared by, date: A Hägglund	Approved by, date: S Hällgren 2024-03-15			Document no. 3HAC026871-020	Rev. Ind 15

We reserve all rights in this document and in the information contained therein. Reproduction, use or disclosure to third parties without express authority is strictly forbidden. © Copyright ABB

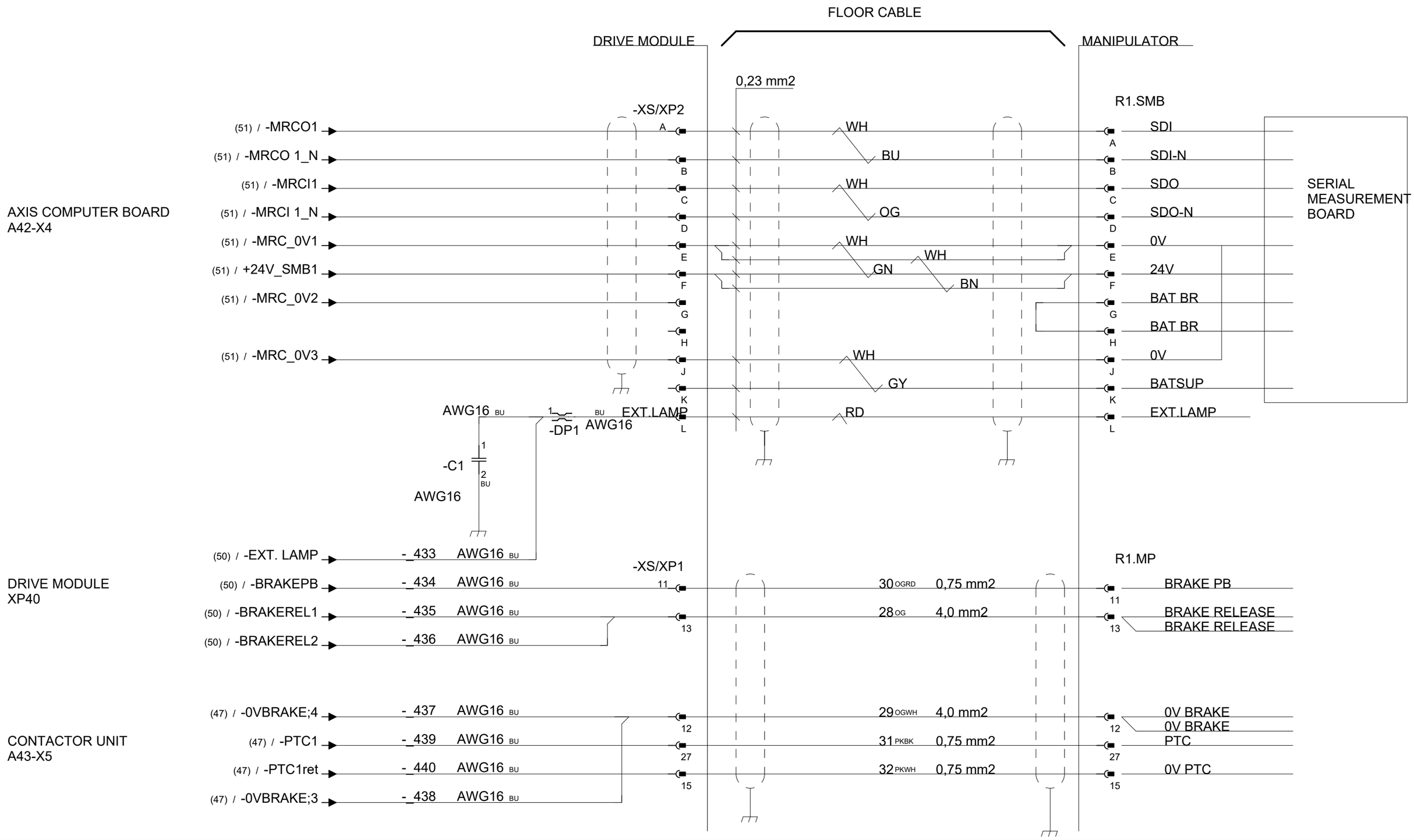

Latest revision:		Lab/Office: RA/RDP	PMC DESIGN 15 Rel: 24B CONTROL CABLE IRB 66xx - 76xx	Status: Approved	Plant: = Location: + Sublocation: +
Prepared by, date: A Hägglund	Approved by, date: S Hällgren 2024-03-15			Document no. 3HAC026871-020	Rev. Ind 15
					Page 96 Next 97 Total 125

We reserve all rights in this document and in the information contained therein. Reproduction, use or disclosure to third parties without express authority is strictly forbidden. © Copyright ABB

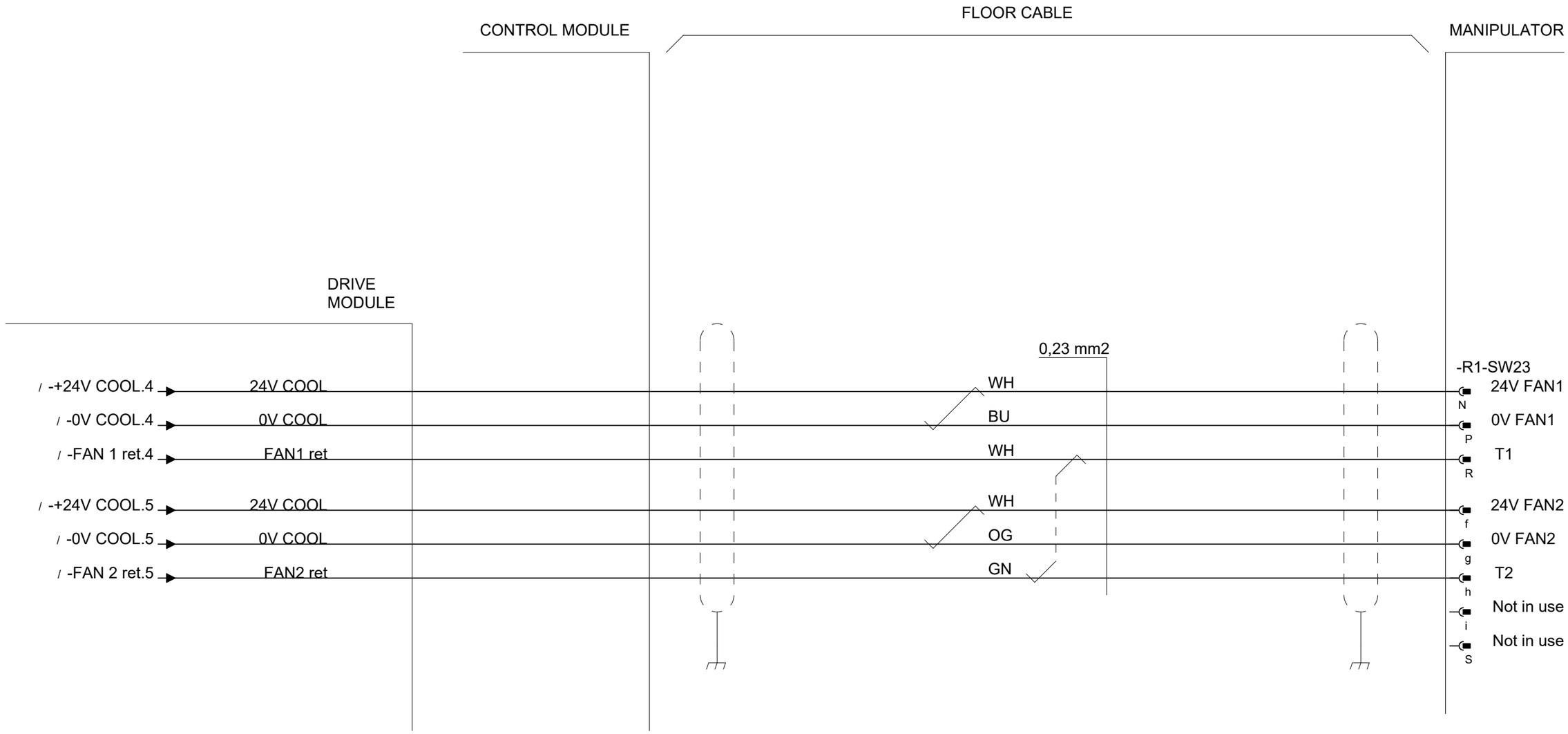

Latest revision:	ABB	Lab/Office: RA/RDP	PMC DESIGN 15 Rel: 24B COOLING AXES 1/2 IRB 6600 - 7600	Status: Approved	Plant: = Location: + Sublocation: +
Prepared by, date: A Hägglund / Approved by, date: S Hällgren 2024-03-15				Document no. 3HAC026871-020	Rev. Ind 15
					Page 97 Next 98 Total 125

We reserve all rights in this document and in the information contained therein. Reproduction, use or disclosure to third parties without express authority is strictly forbidden. © Copyright ABB

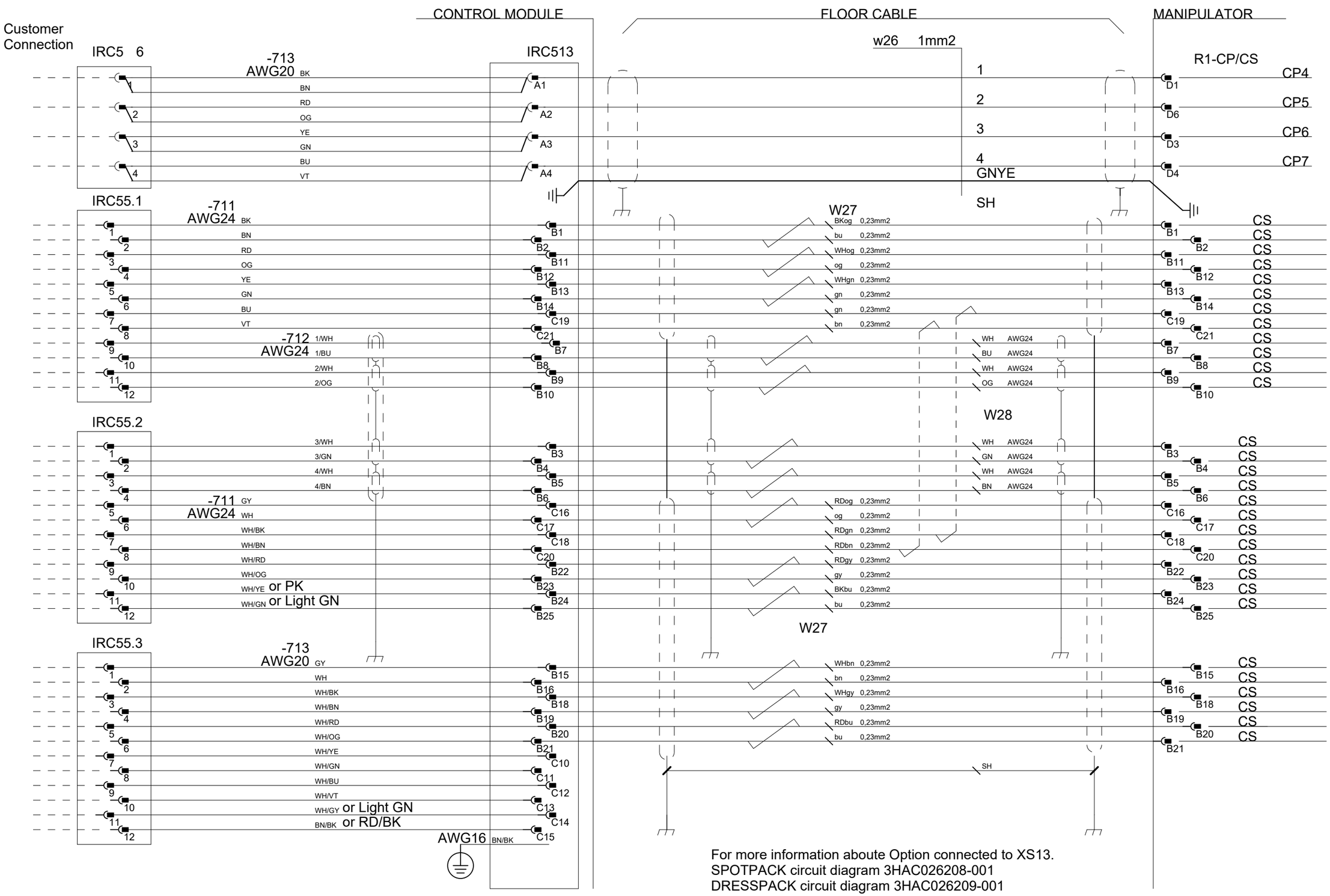

For more information aboute Option connected to XS13.
SPOTPACK circuit diagram 3HAC026208-001
DRESSPACK circuit diagram 3HAC026209-001

According to Manipulator diagram 3HAC025744-001 and 3HAC13347-1

Latest revision:		Lab/Office: RA/RDP	PMC DESIGN 15 Rel: 24B CUSTOMER POWER/SIGNAL IRB 6600 - 7600	Status: Approved	Plant: = Location: + Sublocation: +
Prepared by, date: A Hägglund	Approved by, date: S Hällgren 2024-03-15			Document no. 3HAC026871-020	Rev. Ind 15

We reserve all rights in this document and in the information contained therein. Reproduction, use or disclosure to third parties without express authority is strictly forbidden. © Copyright ABB

Customer Connection

Additinal to page 93, 94 and 95

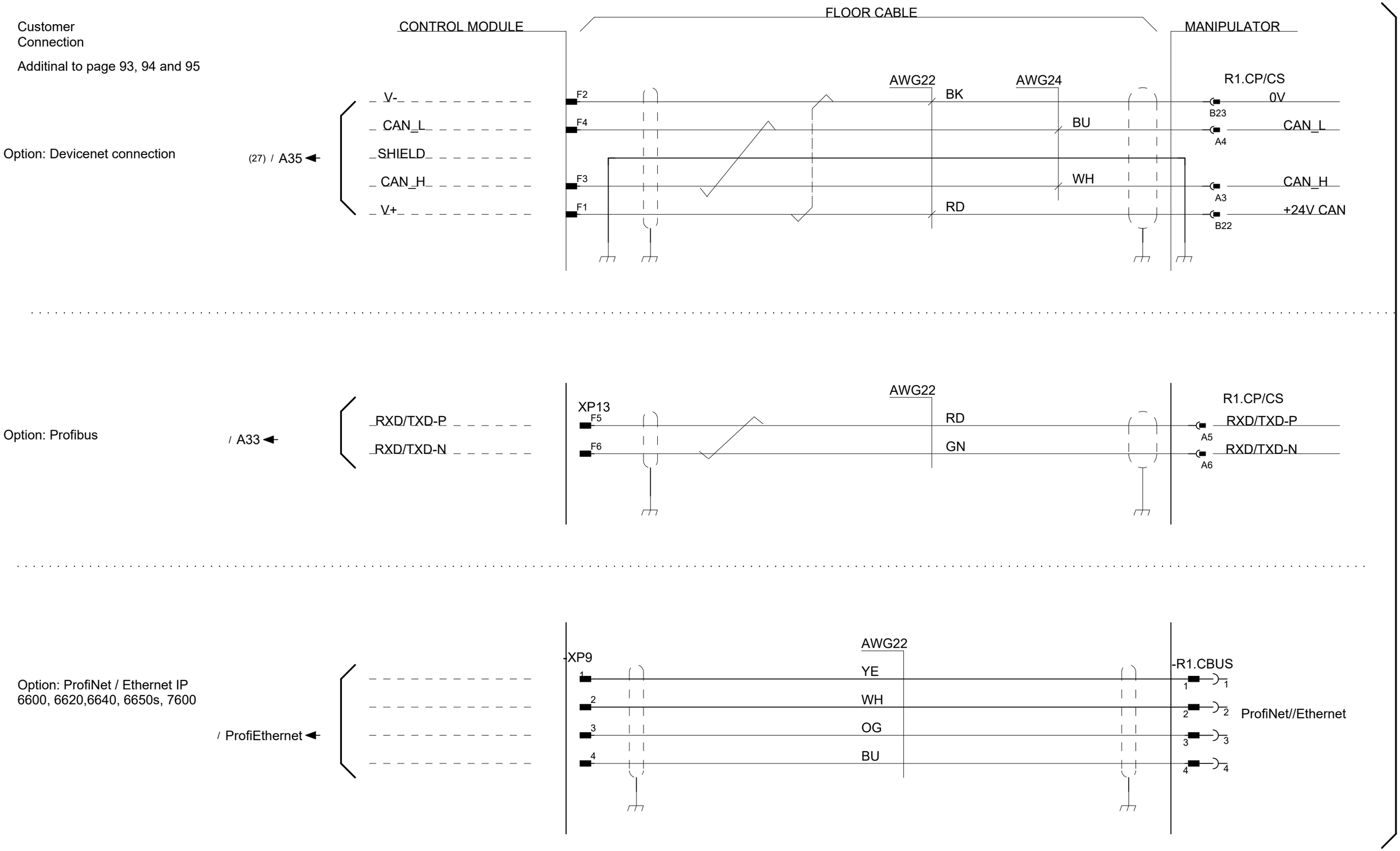

According to Manipulator diagram 3HAC025744-001 and 3HAC13347-1

Latest revision:		ABB	Lab/Office: RA/RDP	PMC DESIGN 15 Rel: 24B DevNet//IBUS//PBUS ADDITION TO CP/CS IRB 6600 - 7600	Status: Approved	Plant: = Location: + Sublocation: +
Prepared by, date: A Hägglund	Approved by, date: S Hällgren 2024-03-15				Document no. 3HAC026871-020	Rev. Ind 15

We reserve all rights in this document and in the information contained therein. Reproduction, use or disclosure to third parties without express authority is strictly forbidden. © Copyright ABB

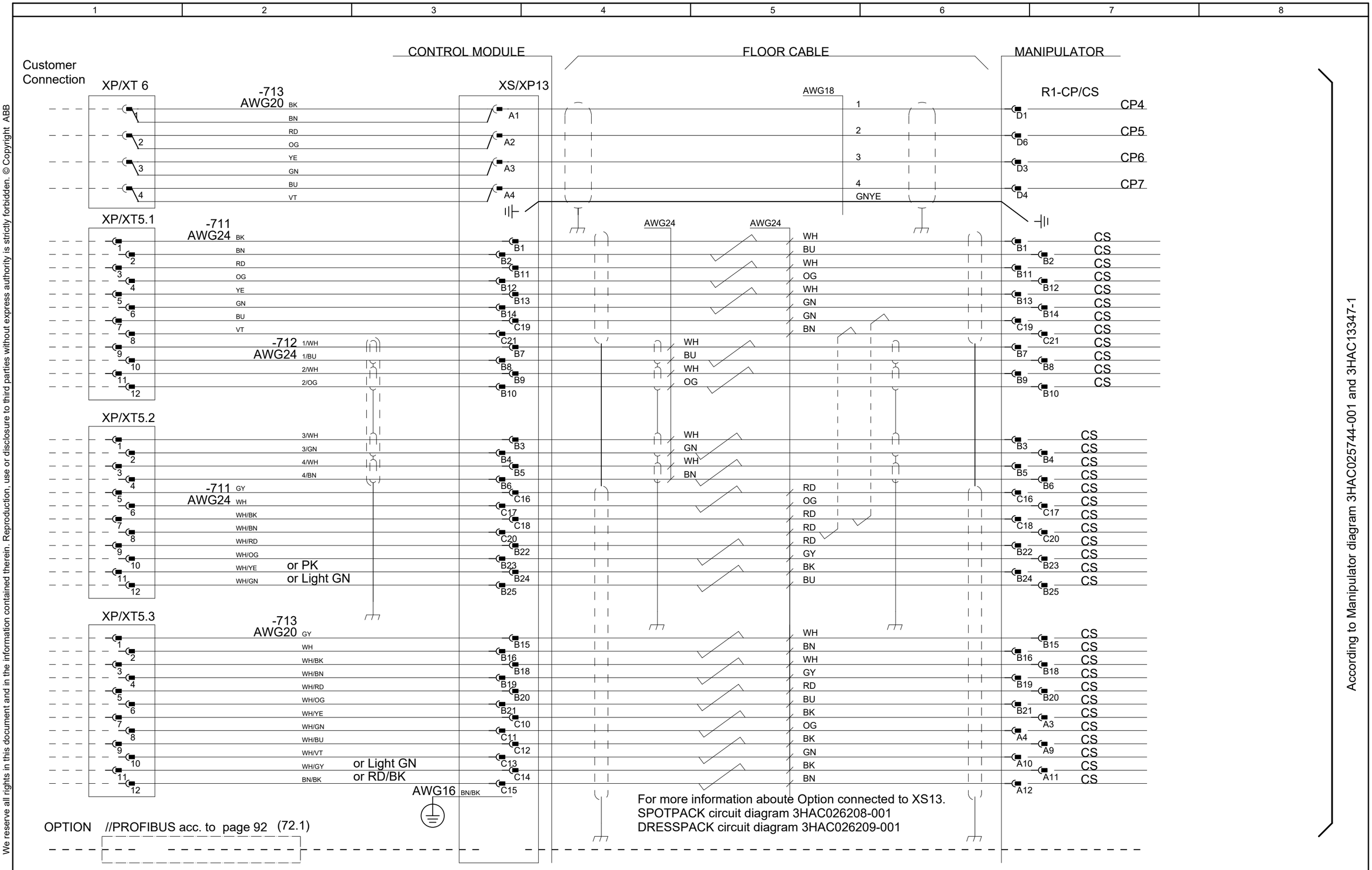

Latest revision:		Lab/Office: RA/RDP	PMC DESIGN 15 Rel: 24B CUSTOMER POWER/SIGNAL PROFI BUS IRB 6600 - 7600	Status: Approved	Plant: = Location: + Sublocation: +
Prepared by, date: A Hägglund	Approved by, date: S Hällgren 2024-03-15			Document no. 3HAC026871-020	Rev. Ind 15

We reserve all rights in this document and in the information contained therein. Reproduction, use or disclosure to third parties without express authority is strictly forbidden. © Copyright ABB

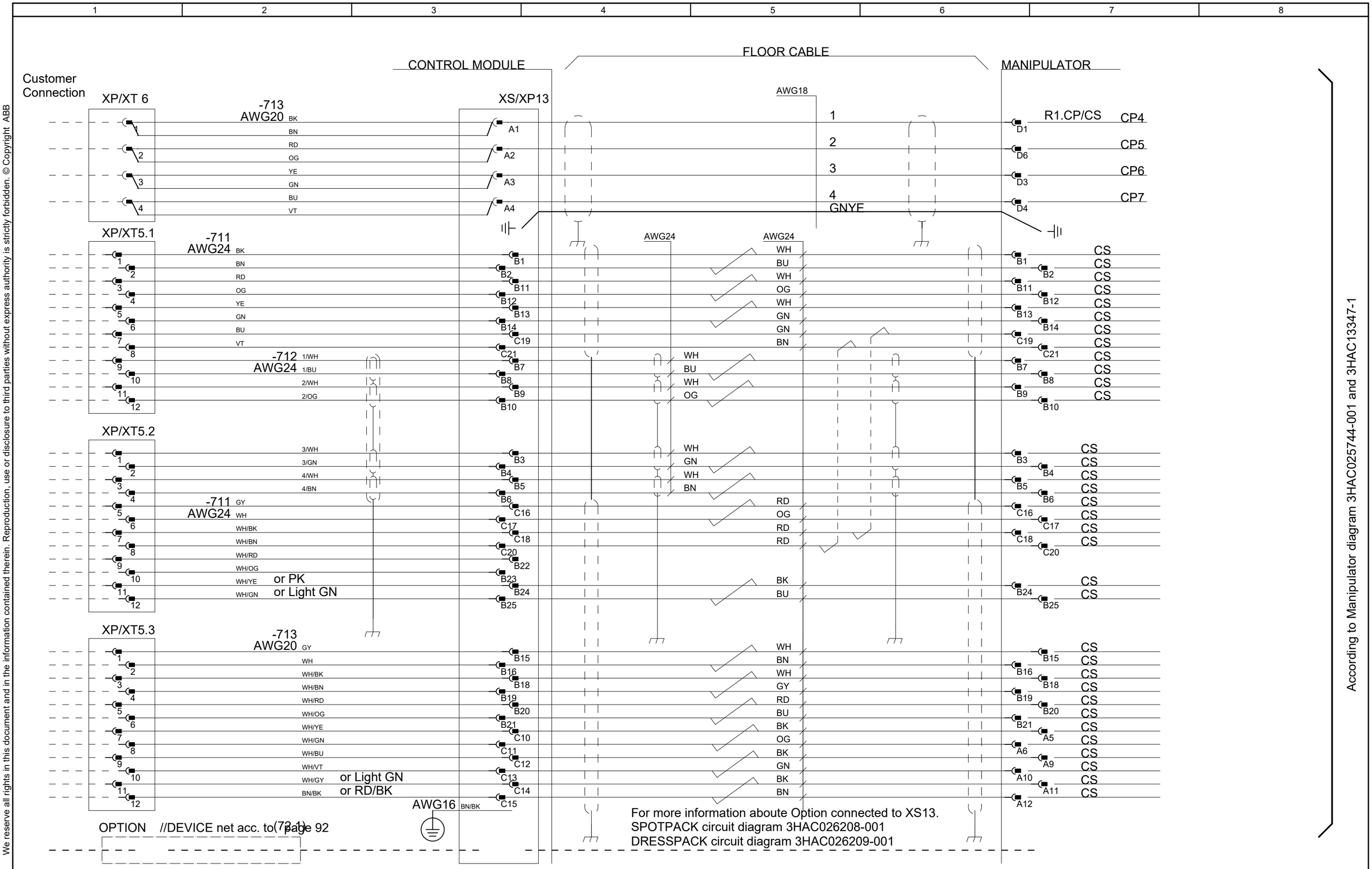

Latest revision:		Lab/Office: RA/RDP	PMC DESIGN 15 Rel: 24B CUSTOMER POWER/SIGNAL DEVICE NET IRB 6600 - 7600	Status: Approved	Plant: = Location: + Sublocation: +
Prepared by, date: A Hägglund	Approved by, date: S Hällgren 2024-03-15			Document no. 3HAC026871-020	Rev. Ind 15
					Page 101 Next Total 125